A Die Sets

B Precision Ground Plates and Flat Bars

C Lifting and Clamping Devices

D Guide Elements

E Ground Precision Components

F Springs

G Elastomer-Bars, -Sheets, -Sections

H FIBRO Chemical Tooling Aids

J Peripheral Equipment

K Cam Units

L Standard Parts for Mould Making

Standard Parts for Mould Making

subject to alterations

Contents

Guide Elements

Locating units, roundLocating units, flat	L6
Compensation Discs	L7
Adjusting washers	L7
Ejector rods	L8
Centering sleeves	L9
Guide pillars	L10-L11
Guide pillars, shouldered	L12-L15
Locating guide pillars, shouldered	L16-L19
Guide pillars with flange	L20
Guide pillars (diagonal load pillars)	L21
Guide sleeves	L22
Guide bushes	L23
Locating guide bushes	L24
Ball Bearing Guides	L25
Oilless Guide Bushes with collar, Bronze with Non-Liquid Lubricant	L26-L29
Oilless Guide bushes Bronze with and without Non-Liquid lubricant	L30-L31
Rectangular Guides	L32
Rectangular Guides with rollers	L33

Forming / Demoulding

Sliders for transverse bolt guides	L36
Bolt Guides	L37
Hardened Ejector Pins - DIN ISO 6751	L38
Hotwork Precision Ejector Pins - Nitrided DIN ISO 6751	L39
Hardened Ejector Pins DIN ISO 8694	L40
Hotwork Precision Ejector PinsNitrided DIN ISO 8694	L41
Hardened Ejector Pins - Conical Head similar to DIN 1530 Shape D	L42
Hotwork Precision Ejector Pins Nitrided - similar to DIN 1530 Shape D	L43
Blade Precision Ejectors -Hardened similar to DIN ISO 8693	L44
Hotwork Blade Precision Ejectors - Nitrided similar to DIN ISO 8693	L45
Precision-Ejector Sleeves - Hardened - DIN ISO 8405	L46
Hotwork Precision Ejector Sleeves - Nitrided - DIN ISO 8405	L47
Date insert, complete –(standard version) embossed lettering	L48
Date insert, complete –(short version)embossed lettering	L49
Quill holders for core tempering	L50
O-Rings	L51

Gas Springs

FML Gas Springs for Mould Making	L53-L69

subject to alterations

Guide Elements

Locating units, round
Locating units, flat

2442.12.
2442.13.

Mounting Example

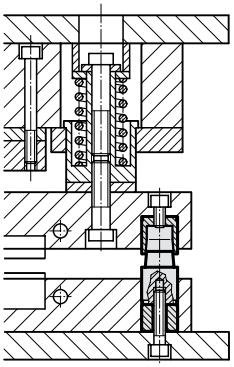

2442.12. Locating unit, round
(without compensation disc)

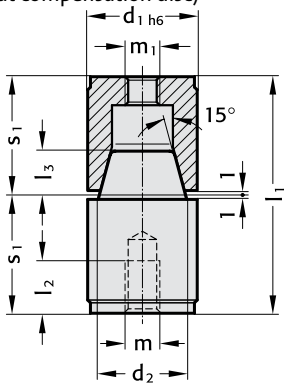

2442.12. Locating unit, round

d_1	d_2	l_1	l_2	l_3	m	m_1	s_1
12	8	34	6	4	4	4	17
14	10	34	7,5	6	5	5	17
16	10	34	7,5	6	5	5	17
20	15	54	12	9	8	8	27
25	20	54	12	10	8	8	27
26	20	54	12	10	8	8	27
30	25	72	15	14	10	10	36
32	25	72	15	14	10	10	36
42	35	92	15	18	10	10	46

Description:

Conical centring inserts are used to increase repeat accuracy in mould, die and machine-making.

Ordering Code (example):

Locating unit, round, two-part	=	2442.
Conical angle = 15°	=	12.
d_1 = 25 mm	=	025.
l_1 = 54 mm	=	054
Order No	=	2442.12.025.054

2442.13. Locating unit, flat

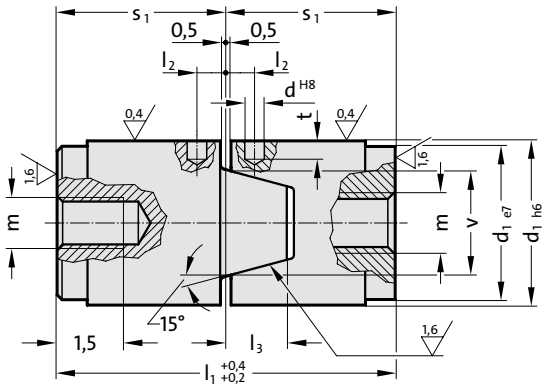

2442.13. Locating unit, flat

d_1	d	l_1	l_2	l_3	v	s_1	t	m
30	4	72	5	10	18	36	5	10
42	5	92	6	14	23	46	7	10
54	6	112	8	17	30	56	8	12
80	8	152	8	27	42	76	11	16

Ordering Code (example):

Locating unit	=	2442.
flat	=	13.
d_1 = 42 mm	=	042.
l_1 = 92 mm	=	092
Order No	=	2442.13.042.092

FIBRO

2442.12.3. Compensation Discs
2442.12.4. Adjusting washers

2442.12.3. Compensation Discs

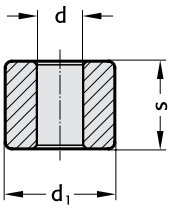

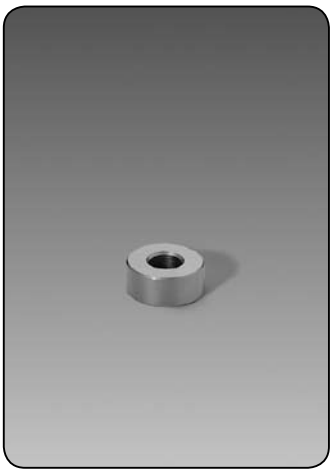

2442.12.3. Compensation Discs

d_1	s	d	d_1	s	d	d_1	s	d	d_1	s	d
12	10	4,5	20	9	8,5	26	9	8,5	42	10	10,5
				10			10			20	
				15			20			30	
14	5	5,5		20			30				
	10			30		30	10	12,5			
	14			40			20				
	19		25	9	10,5		30				
16	5	6,5		10			40				
	10			15			50				
	15			20		32	10	12,5			
	19			25			20				
	20			35			30				
	25			45			40				
				55			50				

Ordering Code (example):

Locating unit, round	=	2442.12.
Compensation Disc	=	3.
d_1 = 25 mm	=	025.
s = 10 mm	=	010
Order No	=	2442.12.3.025.010

2442.12.4. Adjusting washers

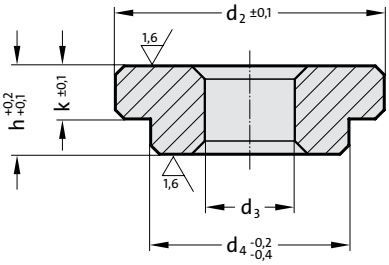

2442.12.4. Adjusting washers

d_4	d_3	d_2	h	k
14	5,5	16	5	3,2
20	8,5	25,5	9	6,3
26	8,5	31,5	9	6,3
30	11	35,5	10	6,3
42	11	47,5	10	6,3

Ordering Code (example):

Locating unit, round	=	2442.12.
Adjusting washer	=	4.
d_4 = 30 mm	=	030
Order No	=	2442.12.4.030

3300.10. Ejector rods

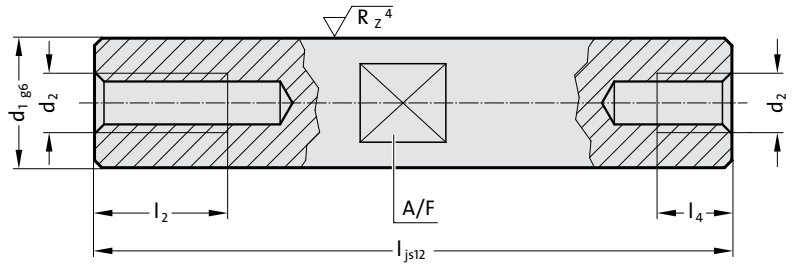

3300.10. Ejector rods

d_1	l	d_2	l_2	l_4	A/F
10	60	M 6	16	9	9
	70				
	80				
	100				
	120				
	140				
14	60	M 8	16	11	12
	70				
	80				
	100				
	120				
	140				
	160				
	180				
18	100	M10	20	12	14
	120				
	140				
	160				
	180				
	200				
	220				
	240				
20	100	M12	25	14	16
	120				
	140				
	160				
	180				
	200				
	220				
	240				

d_1	l	d_2	l_2	l_4	A/F
24	120	M12	25	14	19
	140				
	160				
	180				
	200				
	240				
30	180	M16	30	16	24
	220				
	260				
	300				

Ordering Code (example):

Ejector rod	=	3300.10.
d_1 = 20 mm	=	020.
l = 140 mm	=	140
Order No	=	3300.10.020.140

3100.04. Centering sleeves

3100.04. Centering sleeves

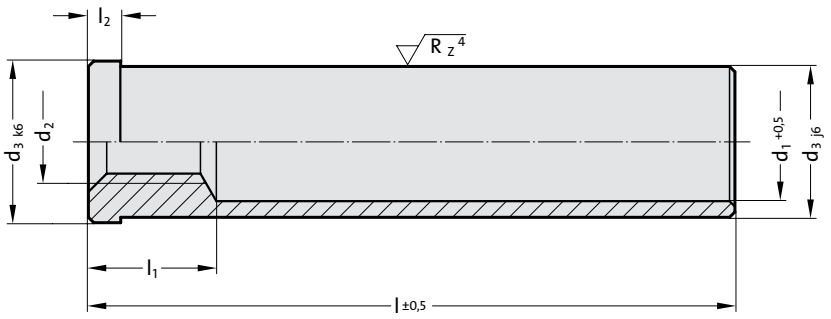

3100.04. Centering sleeves

d_3	l	d_2	d_1	l_1	l_2
14	20	M 6	11	8	2
	30				
	40				
	50				
	60				
	70				
	80				
	100				
20	30	M 8	16	13	2
	40				
	60				
	80				
	100				
	120				
	140				
	160				
26	30	M10	21	13	2,5
	40				
	60				
	80				
	100				
	120				
	140				
	160				
	180				
30	40	M12	25	13	2,5
	60				
	80				
	100				
	120				
	140				
	160				
	180				
	200				
	240				
42	40	M16	33	13	4,5
	60				
	80				
	100				
	120				
	140				
	160				
	180				
	200				
	220				
	260				
	300				

d_3	l	d_2	d_1	l_1	l_2
54	60	M20	43	13	4,5
	80				
	120				
	160				
	200				
	240				
	280				

Ordering Code (example):

Centering sleeve	=	3100.04.
d_3 = 26 mm	=	026.
l = 30 mm	=	030
Order No	=	3100.04.026.030

3202.12. Guide pillars

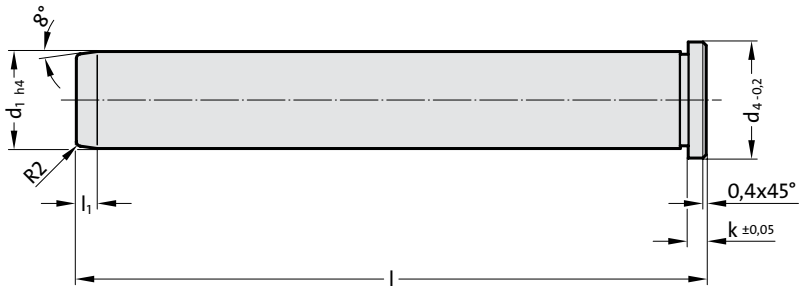

3202.12. Guide pillars

d_1	l	d_4	k	l_1
12	80	16	4	4
	100			
	120			
18	120	22	6	7
	140			
	160			
30	160	36	6	7
	200			
	240			

Ordering Code (example):

Guide pillar	=	3202.12.
d_1 = 18 mm	=	018.
l = 160 mm	=	160
Order No	=	3202.12.018.160

3202.13. Guide pillars

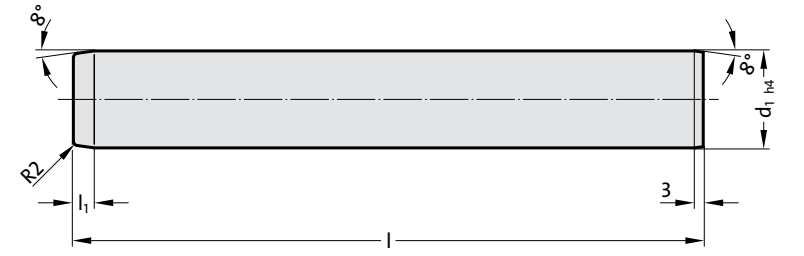

3202.13. Guide pillars

d_1	l	l_1
12	100	3
	125	
18	125	6
	160	
30	160	6
	240	

Ordering Code (example):

Guide pillar	=	3202.13.
d_1 = 18 mm	=	018.
l = 160 mm	=	160
Order No	=	3202.13.018.160

3111.10. Guide pillars

3111.10. Guide pillars

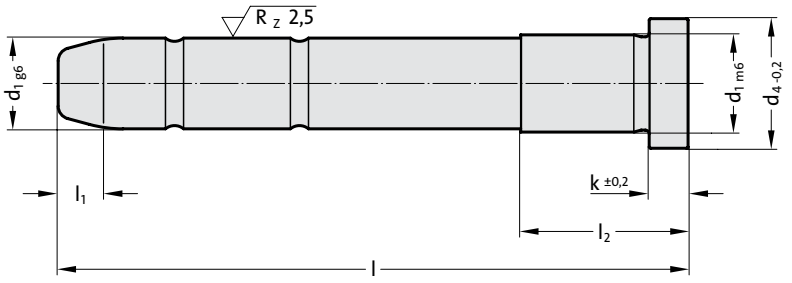

3111.10. Guide pillars

d_1	l	d_4	k	l_1	l_2
10	40	12	3	4	17
	60				
	80				22
	100				27
12	60	16	6	7	17
	80				22
	100				27
	120				36
14	60	18	8	7	17
	80				22
	100				27
	120				36
	140				46
	160				
16	60	20	8	7	22
	80				27
	100				
	120				36
	140				46
	160				
18	80	22	8	7	27
	100				
	120				36
	140				46
	160				
	180				56
	200				
20	80	24	8	7	27
	100				
	120				36
	140				46
	160				
	180				56
	200				
22	100	26	15	7	36
	120				46
	140				
	160				56
	180				
	200				76
	220				
24	100	28	15	7	36
	120				46
	140				
	160				56
	180				
	200				76
	220				
30	160	36	15	7	56
	200				
	240				76

d_1	l	d_4	k	l_1	l_2
32	160	36	15	7	56
	200				
	240				76
40	200	48	15	10	56
	240				76
	300				96
50	200	58	15	10	56
	240				76
	300				96
60	240	68	20	12	76
	300				96
	360				116

Ordering Code (example):

Guide pillar	=	3111.10.
d_1 = 22 mm	=	022.
l = 140 mm	=	140
Order No	=	3111.10.022.140

3111.20. Guide pillars, shouldered

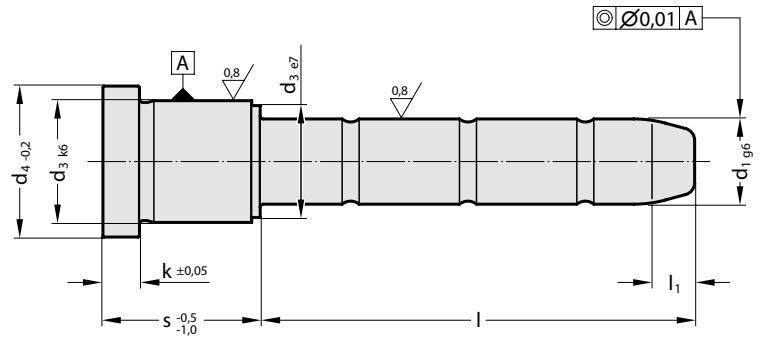

3111.20. Guide pillars, shouldered

d_1	s	l	d_3	d_4	l_1	k
9/10	12	45	14	16	4	3
	17	20				
		30				
		35				
	22	25				
		35				
		55				
	27	25				
		30				
		35				
		50				
	36	25				
		35				
		45				
	46	30				
		45				
		55				
		75				
14/15	22	20	20	25	7	6
		35				
		40				
		45				
		50				
		55				
		65				
		70				
		90				
		110				
	27	20				
		35				
		40				
		45				
		55				
		65				
		85				
		105				
	36	20				
		35				
		40				
		45				
		55				
		65				
		75				
		95				
	46	20				
		35				
		45				
		65				
		85				
		105				

d_1	s	l	d_3	d_4	l_1	k
14/15	56	20	20	25	7	6
		35				
		55				
		75				
		95				
	66	55				
		65				
		95				
	76	55				
		95				
	86	55				
		95				
18/20	22	20	26	31	7	6
		35				
		40				
		45				
		50				
		55				
		60				
		65				
		70				
		80				
		85				
		115				
	27	20				
		35				
		40				
		45				
		50				
		55				
		60				
		65				
		70				
		80				
		85				
		105				
		125				

Ordering Code (example):

Guide pillar, shouldered	= 3111.20.
d_1 = 14 mm	= 014.
s = 36 mm	= 036.
l = 75 mm	= 075
Order No	= 3111.20.014.036.075

3111.20. Guide pillars, shouldered

3111.20. Guide pillars, shouldered

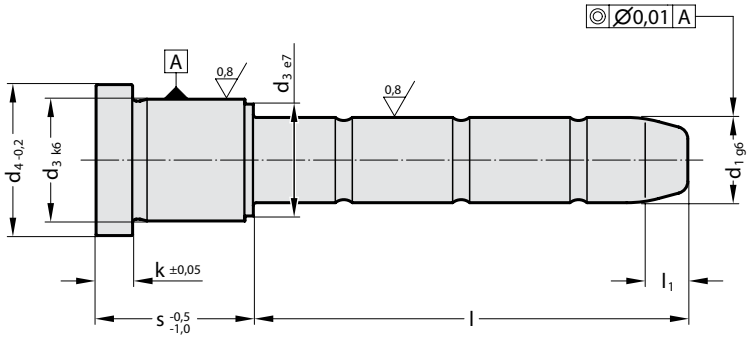

3111.20. Guide pillars, shouldered

d_1	s	l	d_3	d_4	l_1	k
18/20	36	20	26	31	7	3
		35				
		40				
		45				
		50				
		55				
		60				
		65				
		70				
		75				
		80				
		95				
		115				
		135				
	46	20				
		45				
		65				
		85				
		105				
		135				
		165				
	56	20	26	31	7	6
		35				
		55				
		75				
		95				
	66	55				
		75				
		95				
	76	55				
		75				
		95				
	86	55				
		75				
		95				
	96	55				
		95				
	116	115				
22/24	27	25	30	35	7	6
		45				
		50				
		60				
		65				
		70				
		80				
		85				
		105				
		125				
		165				

d_1	s	l	d_3	d_4	l_1	k
22/24	36	25	30	35	7	6
		45				
		50				
		55				
		60				
		70				
		75				
		80				
		95				
		115				
		135				
		165				
	46	25				
		45				
		50				
		60				
		65				
		70				
		80				
		85				
		105				
		125				
		165				
	56	25				
		45				
		55				
		75				
		95				
		115				
		165				
	66	55				
		75				
		95				
	76	25				
		45				
		55				
		75				
		95				
		115				

Ordering Code (example):

Guide pillar, shouldered	=	3111.20.
d_1 = 24 mm	=	024.
s = 76 mm	=	076.
l = 115 mm	=	115
Order No	=	3111.20.024.076.115

3111.20. Guide pillars, shouldered

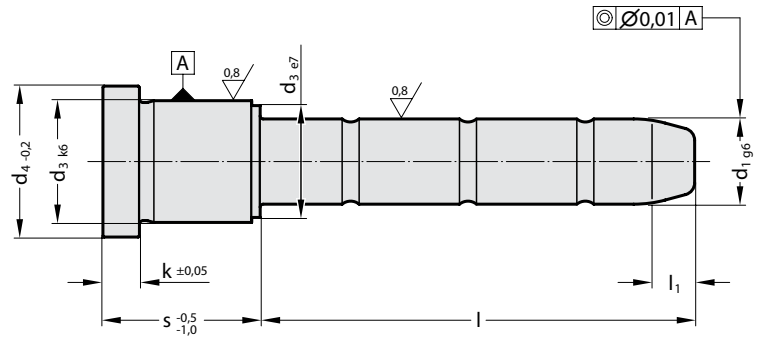

3111.20. Guide pillars, shouldered

d_1	s	l	d_3	d_4	l_1	k
22/24	86	55	30	35	7	6
		75				
		95				
	96	55				
		75				
		95				
	116	75				
		115				
		155				
	136	135				
30/32	27	45	42	47	7	6
		65				
		105				
		165				
	36	55				
		75				
		95				
		115				
		155				
	46	45				
		65				
		85				
		105				
		125				
		165				
	56	55				
		75				
		95				
		115				
		135				
		175				
	66	55				
		75				
		95				
		115				
		135				
		175				
	76	55				
		75				
		95				
		115				
		155				
	86	55				
		75				
		95				
		115				
		155				
	96	55				
		75				
		95				
		115				
		155				

d_1	s	l	d_3	d_4	l_1	k
30/32	116	75	42	47	7	6
		115				
		155				
	136	95				
		115				
		155				
	156	115				
		155				
	196	155				
		195				
40/42	56	75	54	60	7	10
		115				
		155				
		195				
	66	75				
		135				
	76	75				
		115				
		175				
	86	75				
		135				
	96	75				
		115				
		155				
	116	95				
		135				
		195				
	136	95				
		135				
		215				
	156	115				
		155				
		215				
	196	155				
		195				
		235				

Ordering Code (example):

Guide pillar, shouldered	= 3111.20.
d_1 = 32 mm	= 032.
s = 116 mm	= 116.
l = 115 mma	= 115
Order No	= 3111.20.032.116.115

3111.20. Guide pillars, shouldered

3111.20. Guide pillars, shouldered

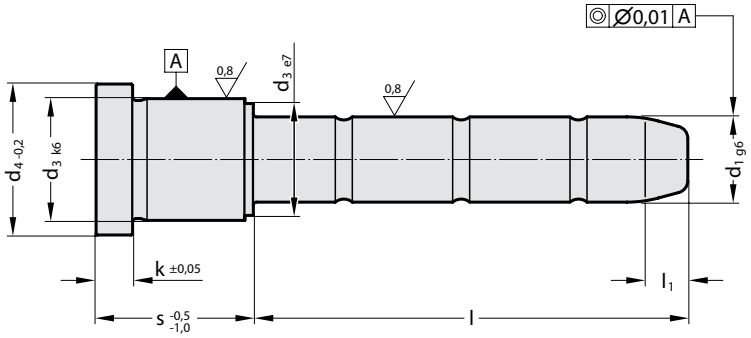

3111.20. Guide pillars, shouldered

d_1	s	l	d_3	d_4	l_1	k
50	96	115	66	72	10	10
		155				
		195				
	116	135				
		155				
		195				
	136	135				
		155				
		195				
	156	135				
		155				
		195				
	196	175				
		195				
		235				
60	96	115	80	86	10	20
		155				
		195				
	116	135				
		155				
		195				
	136	135				
		155				
		195				
	156	155				
		195				
		235				
	196	175				
		195				
		235				
	246	195				
		235				
		275				
		315				

Ordering Code (example):

Guide pillar, shouldered	=	3111.20.
d_1 = 60 mm	=	060.
s = 96 mm	=	096.
l = 195 mm	=	195
Order No	=	3111.20.060.096.195

3111.21. Locating guide pillars, shouldered

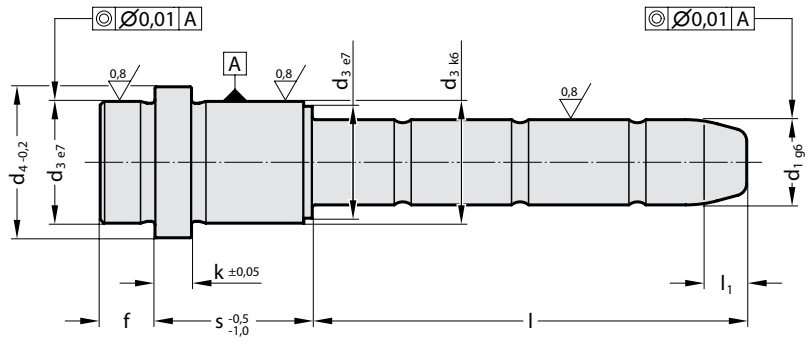

3111.21. Locating guide pillars, shouldered

d_1	s	l	d_3	d_4	l_1	k	f
9/10	12	25	14	16	7	3	3
		45					
		65					
	17	20					
		25					
		30					
		35					
		50					
		55					
		70					
		75					
	22	25					
		35					
		55					
		75					
		95					
	27	20					
		25					
		30					
		45					
		50					
		70					
		90					
	36	25					
		35					
		45					
		65					
		85					
	46	30					
		35					
		45					
		70					
	56	35					
		60					
14/15	17	35	20	25	7	6	9
		55					
		75					
		95					
	22	30					
		50					
		70					
		90					
		110					
		125					
		150					
	27	30					
		45					
		65					
		85					
		105					
		125					
		145					
		165					

d_1	s	l	d_3	d_4	l_1	k	f
14/15	36	35	20	25	7	6	9
		55					
		75					
		95					
		125					
		155					
	46	35					
		45					
		65					
		85					
		105					
		125					
		145					
	56	35					
		55					
		75					
		95					
		135					
	66	55					
		65					
		95					
		125					
	76	55					
		95					
	86	55					
		95					
	96	55					
		95					
	116	75					
18/20	17	35	26	31	7	6	9
		55					
		75					
		120					
	22	35					
		45					
		65					
		85					
		115					

Ordering Code (example):

Locating guide pillar, shouldered	=	3111.21.
d_1 = 15 mm	=	015.
s = 27 mm	=	027.
l = 85 mm	=	085
Order No	=	3111.21.015.027.085

3111.21. Locating guide pillars, shouldered

3111.21. Locating guide pillars, shouldered

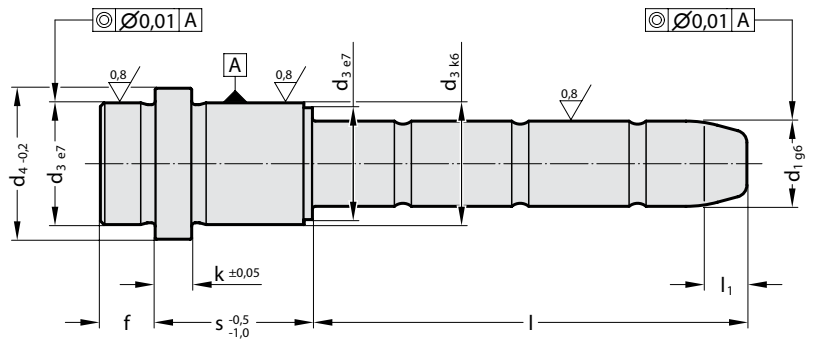

3111.21. Locating guide pillars, shouldered

d_1	s	l	d_3	d_4	l_1	k	f
18/20	27	35	26	31	7	6	9
		45					
		65					
		85					
		105					
		125					
		165					
		225					
		245					
	36	35					
		55					
		75					
		95					
		115					
		135					
		165					
		225					
		255					
	46	35					
		45					
		65					
		85					
		105					
		135					
		165					
		245					
	56	35					
		55					
		75					
		95					
		155					
	66	35					
		55					
		75					
		95					
		145					
	76	55					
		75					
		95					
		135					
	86	55					
		75					
		95					
		125					
	96	55					
		95					
	116	75					
		115					
	136	135					

d_1	s	l	d_3	d_4	l_1	k	f
22/24	17	35	30	35	7	6	9
		55					
		75					
	22	35					
		55					
		75					
		105					
		130					
	27	35					
		45					
		65					
		85					
		105					
		125					
		165					
		205					
		245					
		285					
	36	35					
		55					
		75					
		95					
		115					
		135					
		165					
		205					
		245					
		285					
	46	35					
		45					
		65					
		85					
		105					
		125					
		165					
		205					
	56	35					
		55					
		75					
		95					
		115					
		165					
		205					

Ordering Code (example):

Locating guide pillar, shouldered	=	3111.21.
d_1 = 20 mm	=	020.
s = 46 mm	=	046.
l = 105 mm	=	105
Order No	=	3111.21.020.046.105

3111.21. Locating guide pillars, shouldered

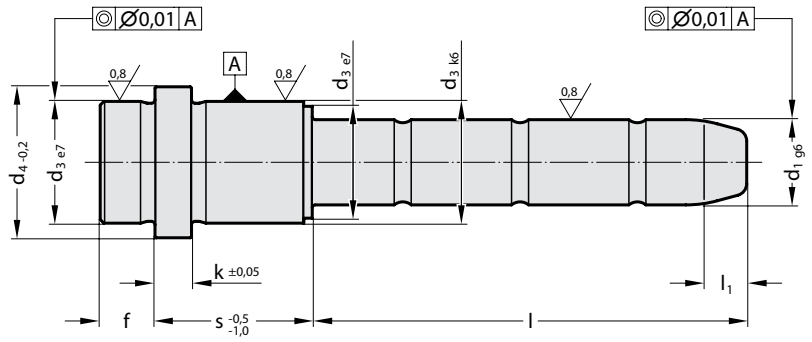

3111.21. Locating guide pillars, shouldered

d_1	s	l	d_3	d_4	l_1	k	f
22/24	66	35	30	35	7	6	9
		55					
		75					
		95					
		155					
	76	55					
		75					
		95					
		115					
		145					
	86	55					
		75					
		95					
		135					
	96	55					
		75					
		95					
		125					
	116	75					
		115					
		155					
	136	95					
		135					
	156	155					
30/32	27	45	42	47	7	6	9
		65					
		105					
		165					
		185					
		245					
		285					
	36	55					
		75					
		95					
		115					
		155					
		245					
		285					
	46	45					
		65					
		85					
		105					
		125					
		165					
		245					
		285					
	56	55					
		75					
		95					
		115					
		135					
		175					
		245					
		295					

d_1	s	l	d_3	d_4	l_1	k	f
30/32	66	55	42	47	7	6	9
		75					
		95					
		115					
		135					
		175					
		245					
		295					
	76	55					
		75					
		95					
		115					
		155					
		225					
	86	55					
		75					
		95					
		115					
		155					
		225					
	96	55					
		75					
		95					
		115					
		155					
		205					
	116	75					
		115					
		155					
	136	95					
		115					
		155					
	156	115					
		155					
	196	155					
		195					

Ordering Code (example):

Locating guide pillar, shouldered	=	3111.21.
d_1 = 32 mm	=	032.
s = 86 mm	=	086.
l = 95 mm	=	095
Order No	=	3111.21.032.086.095

3111.21. Locating guide pillars, shouldered

3111.21. Locating guide pillars, shouldered

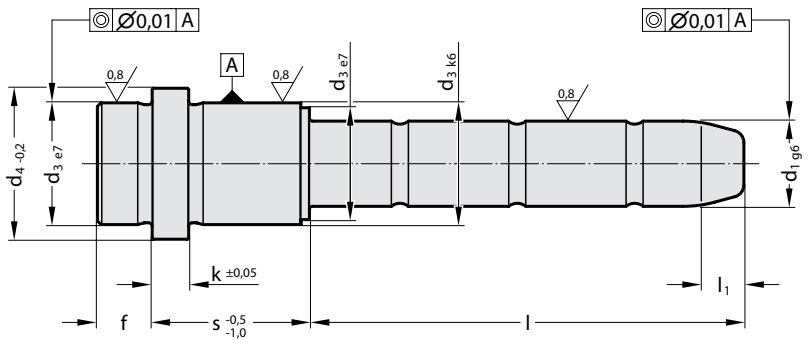

3111.21. Locating guide pillars, shouldered

d_1	s	l	d_3	d_4	l_1	k	f
40/42	46	95	54	60	7	10	12
		165					
	56	75					
		115					
		155					
		195					
	66	75					
		135					
	76	75					
		115					
		175					
	86	75					
		135					
	96	75					
		115					
		155					
	116	95					
		135					
		195					
	136	95					
		135					
		215					
	156	115					
		155					
		215					
	196	155					
		195					
		235					
	246	165					
		245					

Ordering Code (example):

Locating guide pillar, shouldered	=	3111.21.
d_1 = 42 mm	=	042.
s = 96 mm	=	096.
l = 115 mm	=	115
Order No	=	3111.21.042.096.115

Guide pillars with flange 3111.31.

3111.31. Guide pillars with flange

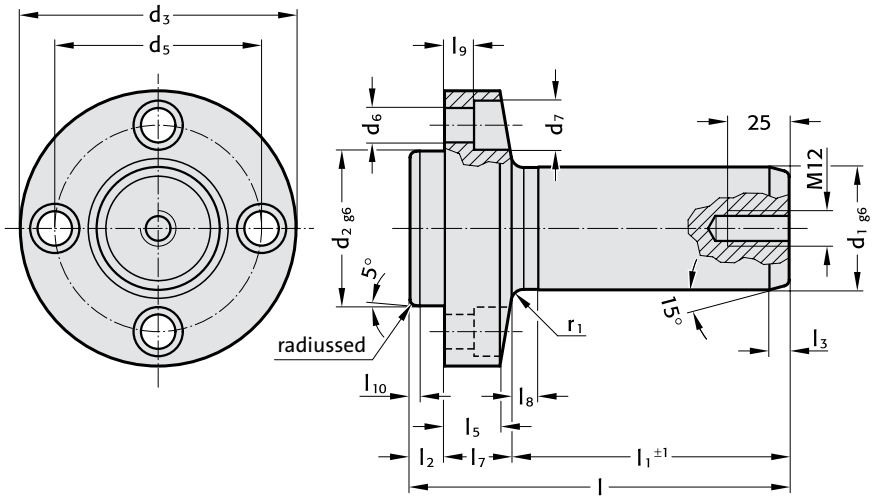

Material:

Steel

Surface hardness: case hardened 62+2 HRC

Hardness penetration depth: 1.2 mm

Execution:

Ground

Note:

Holding fixture bore H7.
Delivery does not include screws.

Fixing:

socket head screw DIN EN ISO 4762

M 8 x 20
M 10 x 25
M 12 x 30
M 14 x 35
M 16 x 40

should be used

3111.31. Guide pillars with flange

d_1	32	40	50	63	80
d_2	40	50	63	80	100
d_3	76	92	112	138	170
d_5	55	68	84	105	130
d_6	9	11	14	16	18
d_7	15	18	20	24	26
r	1,6	2	2,5	2,5	3
r_1	4	4	5	6	8
l_2	11	13	14	16	20
l_3	6	6	8	8	10
l_5	15,1	18,4	22,5	27,4	32,1
l_6	11	13	14	16	20
l_7	19	23	28	34	40
l_8	8	9	10	13	15
l_9	9	10	12	15	18
l_{10}	1,5	1,5	2	3	4
l_1	(l)	(l)	(l)	(l)	(l)
67	97				
80	110	116			
95	125	131	137		
112	142	148	154	162	
132		168	174	182	192
160			202	210	220
190				240	250
224					284
436				486	

Ordering code (example):

Guide pillar with flange	= 3111.31.
d_1 = 32 mm	= 032.
l_1 = 112 mm	= 112
Order no.	= 3111.31.032.112

subject to alterations

3110.11. Guide pillars (diagonal load pillars)

3110.11. Guide pillars (diagonal load pillars)

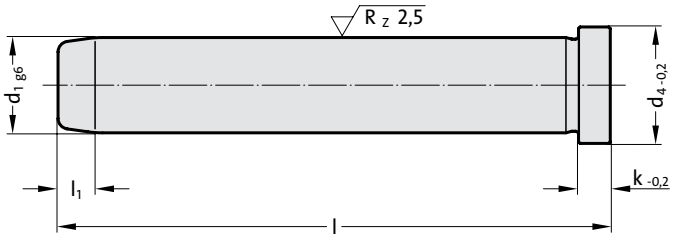

3110.11. Guide pillars (diagonal load pillars)

d_1	8	9	10	12	14	15	16	18	20	22	24	30	32	40	50
d_4	10	12	12	16	18	18	20	22	24	26	28	36	36	48	58
k	3	3	3	6	8	8	8	8	8	15	15	15	15	15	15
l_1	4	4	4	7	7	7	7	7	7	7	7	7	7	10	10
l															
40	●	●	●	●			●								
60	●	●	●	●	●	●	●	●	●						
80	●	●	●	●	●	●	●	●	●	●	●				
100	●	●	●	●	●	●	●	●	●	●	●	●	●		
120		●	●	●	●	●	●	●	●	●	●	●	●		
140				●	●	●	●	●	●	●	●				
160				●	●	●	●	●	●	●	●	●	●	●	●
180					●	●	●	●	●	●	●				
200							●	●	●	●	●	●	●	●	●
220										●	●				
240								●	●	●	●	●	●	●	●
300										●	●	●	●	●	●
360												●	●	●	●

Ordering Code (example):

Guide pillar (diagonal load pillar)	=	3110.11.
d_1 = 20 mm	=	020.
l = 180 mm	=	180
Order No	=	3110.11.020.180

3100.09. Guide sleeves

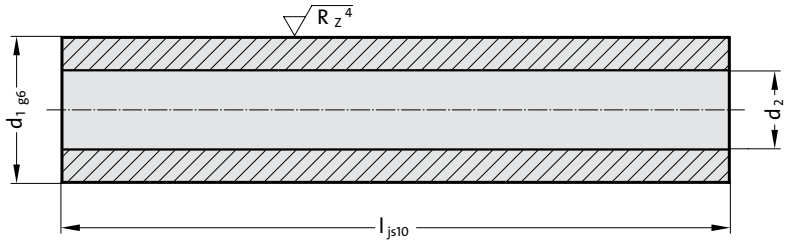

3100.09. Guide sleeves

d_1	10	14	18	24	30
d_2	6,2	8,3	10,4	12,5	16,5
l					
20	●				
30	●	●			
40	●	●	●		
50	●	●			
60	●	●	●	●	
70	●	●			
80	●	●	●	●	●
100	●	●	●	●	●
120	●	●	●	●	●
140	●	●	●	●	●
160		●	●	●	●
180		●	●	●	●
200			●	●	
220			●		●
240			●	●	
260					●
300					●

Ordering Code (example):

Guide sleeve	= 3100.09.
d_1 = 10 mm	= 010.
l = 100 mm	= 100
Order No	= 3100.09.010.100

3120.40. Guide bushes

3120.40. Guide bushes

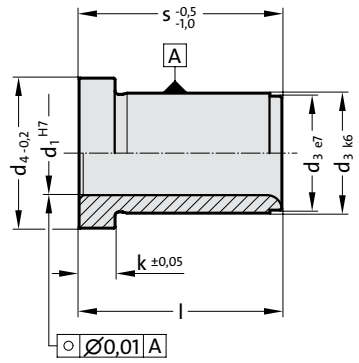

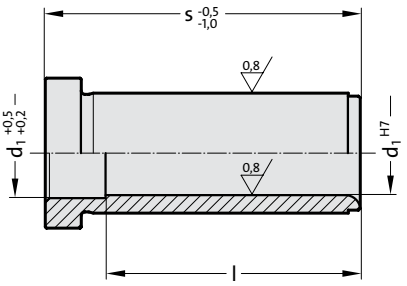

3120.40. Guide bushes

d_1	s	l	d_3	d_4	k
9/10	9	9	14	16	3
	12	12			
	17	17			
	22	22			
	27	27			
	36	36			
	46	46			
	56	46			
	66	46			
12	17	17	18	23	6
	22	22			
	27	27			
	36	36			
	46	46			
	56	56			
14/15	12	12	20	25	6
	17	17			
	22	22			
	27	27			
	36	36			
	46	46			
	56	56			
	66	56			
	76	56			
	86	56			
	96	56			
16	17	17	22	25	6
	22	22			
	27	27			
	36	36			
	46	46			
	56	56			
18/20	17	17	26	31	6
	22	22			
	27	27			
	36	36			
	46	46			
	56	56			
	66	66			
	76	76			
	86	76			
	96	76			
	116	76			
22/24	17	17	30	35	6
	22	22			
	27	27			
	36	36			
	46	46			
	56	56			
	66	66			
	76	76			
	86	86			
	96	96			

d_1	s	l	d_3	d_4	k
22/24	116	96	30	35	6
	136	96			
	156	96			
30/32	27	27	42	47	6
	36	36			
	46	46			
	56	56			
	66	66			
	76	76			
	86	86			
	96	96			
	116	116			
	136	116			
	156	116			
	176	116			
40/42	46	46	54	60	10
	56	56			
	66	66			
	76	76			
	86	86			
	96	96			
	116	116			
	136	136			
	156	136			
	196	136			
	246	136			
50	76	76	66	72	10
	96	96			
	116	116			
	136	136			
	156	136			
	196	136			
60	76	76	80	86	20
	96	96			
	116	116			
	136	136			
	156	136			
	196	136			
	246	136			

Ordering Code (example):

Guide bush	= 3120.40.
d_1 = 32 mm	= 032.
s = 116 mm	= 116
Order No	= 3120.40.032.116

3120.42. Locating guide bushes

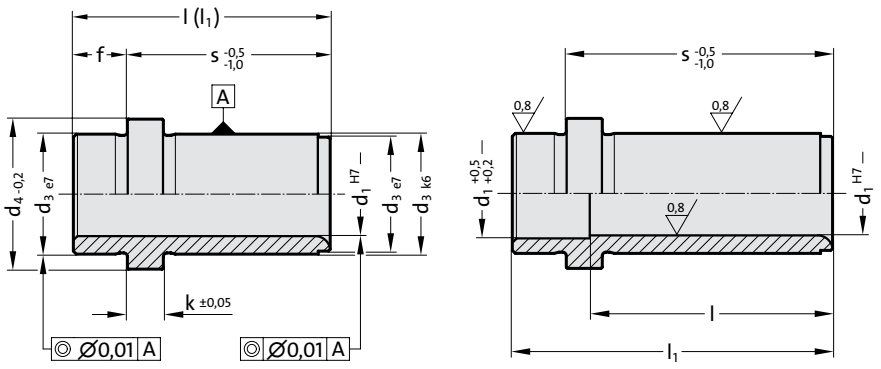

3120.42. Locating guide bushes

d_1	s	l	l_1	d_3	d_4	f	k
9/10	12	15	15	14	16	3	3
	17	20	20				
	22	25	25				
	27	30	30				
	36	39	39				
	46	46	49				
	56	46	59				
	66	46	69				
14/15	17	26	26	20	25	9	6
	22	31	31				
	27	36	36				
	36	45	45				
	46	55	55				
	56	56	65				
	66	56	75				
	76	56	85				
	86	56	95				
	96	56	105				
	116	56	125				
18/20	17	26	26	26	31	9	6
	22	31	31				
	27	36	36				
	36	45	45				
	46	55	55				
	56	65	65				
	66	75	75				
	76	76	85				
	86	76	95				
	96	76	105				
	116	76	125				
	136	76	145				
22/24	17	26	26	30	35	9	6
	22	31	31				
	27	36	36				
	36	45	45				
	46	55	55				
	56	65	65				
	66	75	75				
	76	85	85				
	86	95	95				
	96	105	105				
	116	96	125				
	136	96	145				
	156	96	165				

d_1	s	l	l_1	d_3	d_4	f	k
30/32	27	36	36	42	47	9	6
	36	45	45				
	46	55	55				
	56	65	65				
	66	75	75				
	76	85	85				
	86	95	95				
	96	105	105				
	116	125	125				
	136	116	145				
	156	116	165				
	176	116	185				
	196	116	205				
40/42	46	58	58	54	60	12	10
	56	68	68				
	66	78	78				
	76	88	88				
	86	98	98				
	96	108	108				
	116	128	128				
	136	136	148				
	156	136	168				
	196	136	208				
	246	136	258				

Ordering Code (example):

Locating guide bush	= 3120.42.
d_1 = 24 mm	= 024.
s = 96 mm	= 096
Order No	= 3120.42.024.096

3120.65. Ball Bearing Guides

3120.65. Ball bearing guides

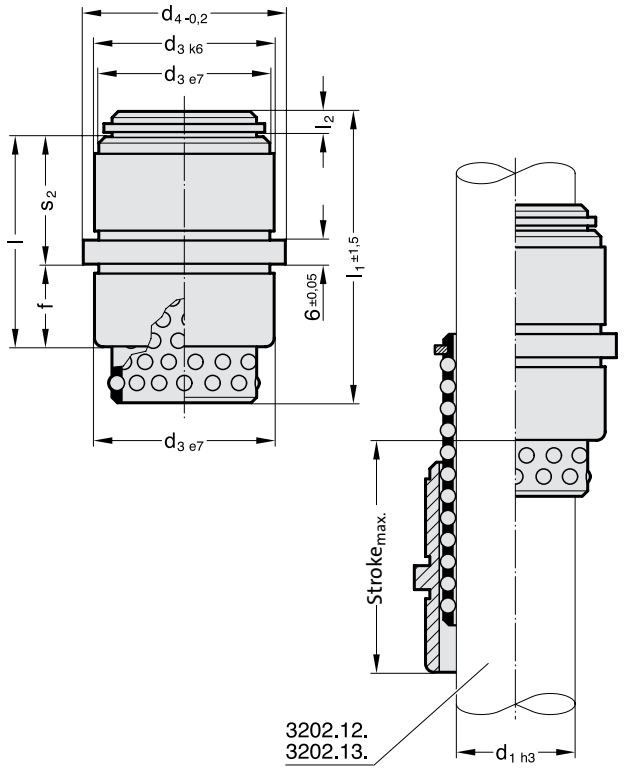

3120.65. Ball bearing guides

d_1	l	l_1	l_2	d_3	d_4	f	s_2	$Stroke_{max.}$
12	24	40	2,1	22	26	6	18	50
		56						82
18	34	45	3	30	35	11	23	44
		56						66
		71						96
30	54	56	4,8	46	52	21	33	32
		75						78
		95						110

Ordering Code (example):

Ball bearing guide	=	3120.65.
d_1 = 18 mm	=	018.
l_1 = 56 mm	=	056
Order No	=	3120.65.018.056

Oilless Guide Bushes with collar
Bronze with Non-Liquid Lubricant

2087.72.

2087.72.

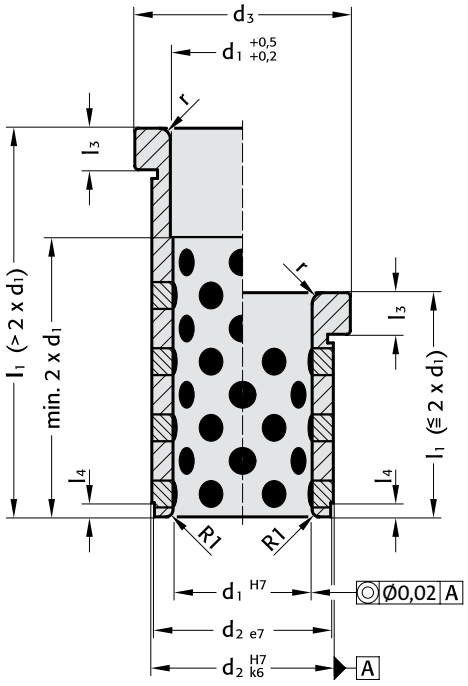

Material:

Bronze with Non-Liquid Lubricant,
oilless lubricating.

Note:

Fit for receiving bore: H 7.

Direction of Motion
Embedded non-liquid lubricant
(section)

Ordering code (Example):

Guide bush	=	2087.72.
d_1 = 18 mm	=	018.
l_1 = 27 mm	=	027
Order No	=	2087.72.018.027

2087.72.

d_1	9/10	12	14/15	16	18/20	22/24	25	30/32	40/42	50	60
d_2	14	18	20	22	26	30	32	42	54	66	80
d_3	16	23	25	27	31	35	38	47	60	72	86
r	0,5	1	1	2	2	3	3	3	3	3	3
l_3	3	6	6	6	6	6	6	6	10	10	20
l_4	1,5	2	2	2	2	3	3	4	5	5	5
l_1											
12	●										
17	●	●	●	●	●	●					
22	●	●	●	●	●	●					
27	●	●	●	●	●	●		●			
36	●	●	●	●	●	●		●			
46	●	●	●	●	●	●	●	●	●		
56	●	●	●	●	●	●	●	●	●		
66					●	●	●	●	●		
76					●	●	●	●	●	●	
86						●	●	●	●	●	
96						●		●	●	●	●
116								●	●	●	●
136									●	●	●
156									●	●	●
196										●	●

subject to alterations

FIBRO

2087.70.

Oilless Guide Bushes with collar
Bronze with Non-Liquid Lubricant

2087.70.

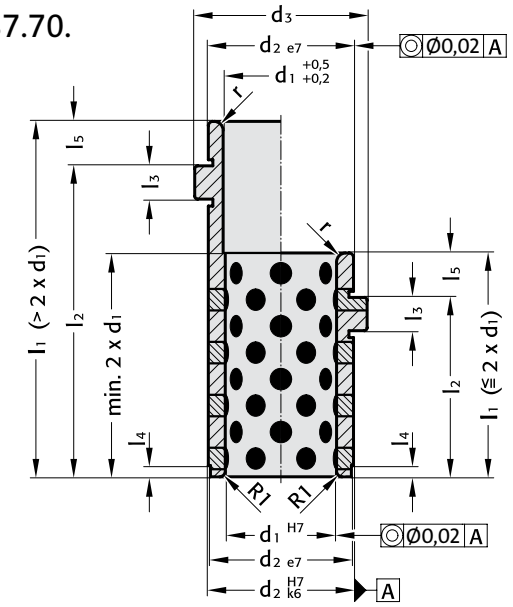

2087.70.

d_1		9 10	14 15	18 20	22 24	30 32	40 42
d_2		14	20	26	30	42	54
d_3		16	25	31	35	47	60
l_3		3	6	6	6	6	10
l_4		1,5	2	2	3	4	5
l_5		3	6	8	8	8	12
r		0,5	1	2	3	3	3
l_1	l_2						
15	12	●					
20	17	●					
23	17		●				
25	17			●	●		
25	22	●					
28	22		●				
30	22			●	●		
30	27	●					
33	27		●				
35	27			●	●	●	
39	36	●					
42	36		●				
44	36			●	●	●	
49	46	●					
52	46		●				
54	46			●	●	●	
58	46						●
59	56	●					
62	56		●				
64	56			●	●	●	
68	56						●
69	66	●					
72	66		●				
74	66			●	●	●	
78	66						●
82	76		●				
84	76			●	●	●	
88	76						●
92	86		●				
94	86			●	●	●	
98	86						●
104	96			●	●	●	
108	96						●
124	116			●	●	●	
128	116						●
144	136				●	●	
148	136						●
164	156				●		
168	156						●
208	196						●

Material:

Bronze with Non-Liquid Lubricant,
oilless lubricating.

Note:

Fit for receiving bore: H7.

Direction of Motion
Embedded non-liquid lubricant
(section)

Ordering Code (example):

Guide bush	=	2087.70.
d_1 = 18 mm	=	018.
l_2 = 27 mm	=	027
Order No	=	2087.70.018.027

Oilless Guide Bushes with collar
Bronze with Non-Liquid Lubricant

2087.71.

Material:

Bronze with Non-Liquid Lubricant,,
oilless lubricating.

Note:

Fit for receiving bore: H7.

Direction of Motion
Embedded non-liquid lubricant
(section)

2087.71.

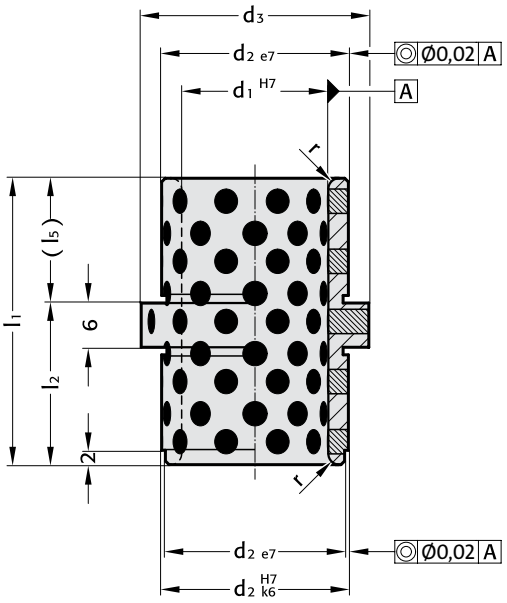

Ordering Code (example):

Guide bush	=	2087.71.
d_1 = 20 mm	=	020.
l_2 = 22 mm	=	022
Order No	=	2087.71.020.022

2087.71.

d_1	14 15	18 20	22 24	30 32
d_2	20	26	30	42
d_3	25	31	35	47
r	1	1,5	2	2
l_1	26	39	49	63
l_2	17	22	27	36
l_5	9	17	22	27

subject to alterations

2087.73.

Oilless Guide Bushes with centre collar
Bronze with Non-Liquid Lubricant

2087.73.

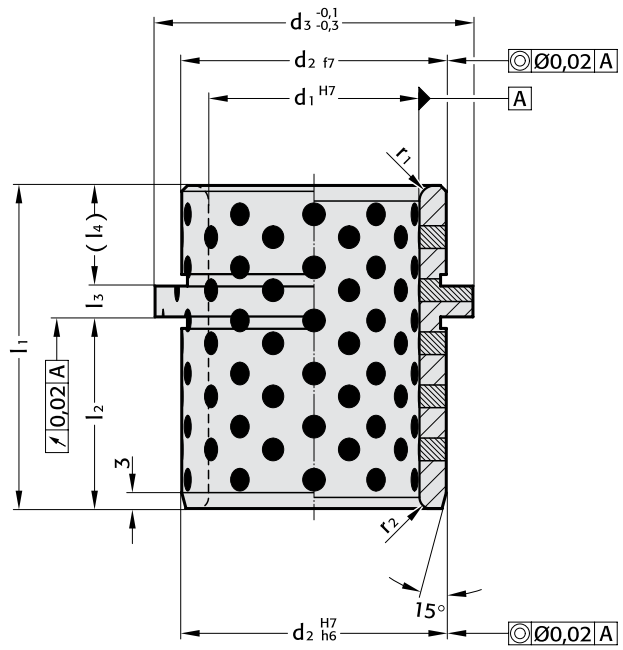

Material:

Bronze with non-liquid lubricant,
oilless lubricating.

Note:

Fit for receiving bore: H7.

Ordering Code (example):

Guide Bush	= 2087.73.
d_1 = 25 mm	= 025.
l_1 = 43 mm	= 043
Order No	= 2087.73.025.043

Direction of Motion
Embedded non-liquid lubricant
(section)

2087.73.

d_1	25	30	40		50		60		63		
d_2	35	42	50		63		80		80		
d_3	40	47	60		72		86		90		
r_1	3	3	4		4		3		4		
r_2	2	2	2		3		3		3		
l_4	11,5	11,5	18,5	18,5	24,5	28,5	21,5	31,5	29,5	37,5	
l_3	7,5	7,5	6		8		7,5		8		
l_2	24	24	35,5	39,5	44,5	55,5	49	55,5	62,5	62,5	
l_1	43	43	60	64	77	92	78	95	100	108	

Oilless Guide bushes
Bronze with Non-Liquid lubricant
Bronze

FIBRO

3120.70.
3120.71.

Material:

3120.70.	Bronze with Non-Liquid lubricant, oilless lubricating
3120.71.	Bronze

Note:

Recommended holding fixture bore H7.
Bushes can be used radially and axially.

Fixing:

Connecting with adhesive or if needed secure with threaded pin or flat mushroom head screw 2192.61.

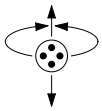

Direction of Motion
Embedded non-liquid lubricant
(section)

3120.70.

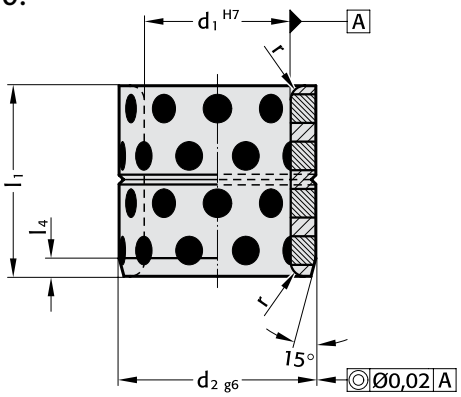

3120.71.

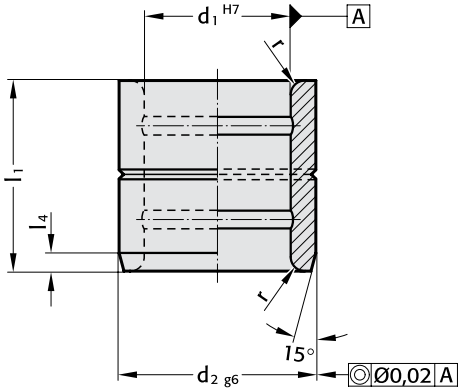

Ordering Code (example):

Guide bush	=	3120.70.
d_1 = 40 mm	=	040.
d_2 = 50 mm	=	050
l_1 = 80 mm	=	080
Order number	=	3120.70.040.050.080

Ordering Code (example):

Guide bush	=	3120.71.
d_1 = 40 mm	=	040.
d_2 = 50 mm	=	050
l_1 = 80 mm	=	080
Order number	=	3120.71.040.050.080

3120.70. / 3120.71.

d_1	8	10	12	13	14	15	16	18	19	20	24	25	28	30	31,5	32	35	38	40	45
d_2	12	14/15	18	19	20	21	22	24	25	26/28/30	32	32/33/35	38	38/40/42	40	42	44/45	48	50/55	55/56/60
r	0,5	0,5	0,5	0,5	0,5	0,75	0,75	0,75	0,75	0,75	0,75	0,75	0,75	0,75	0,75	0,75	0,75	1,5	1,5	1,5
l_4	2	2	2	2	2	2	2	2	4	4	4	4	4	4	4	4	4	4	4	4
l_1 8	●	●/–																		
10	●	●/●	●	●	●	●	●													
12	●	●/–	●		●	●	●													
15	●	●/–	●	●	●	●	●	●		–/●/–										
16			●	●		●	●	●		–/●/●		–/●/●								
20		●/–	●	●	●	●	●	●		–/●/●		–/●/●		●/●/–			–/●		●/–	
25			●		●	●	●	●		–/●/●		–/●/●		●/●/–			●/●		●/●	
30			●		●	●	●	●		–/●/●		–/●/●	●	●/●/–	●	●	●/●	●	●/●	●/●/●
35							●	●		–/●/●		–/●/●		●/●/–			●/●		●/●	●/●/●
37									●	–/●/–										
40							●	●		●/●/●		–/●/●	●	●/●/–	●	●	●/●	●	●/●	●/●/●
47											●	–/●/–								
50										–/●/–		●/●/●		●/●/–			●/●		●/●	●/●/●
60												–/●/–		●/●/●		●	●/●		●/●	●/●/●
70																			●/–	–/–/●
77																		●	●/–	
80																			●/–	–/–/●

FIBRO

3120.70.
3120.71.

Guide bushes
Bronze with Non-Liquid lubricant
Bronze

3120.70.

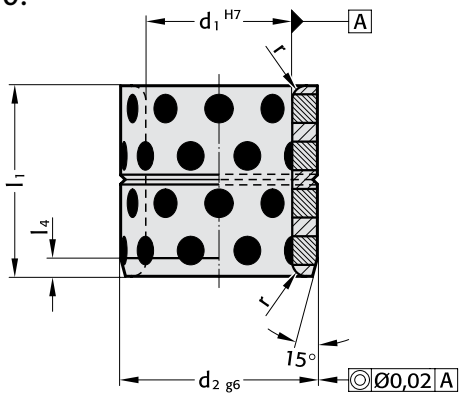

3120.71.

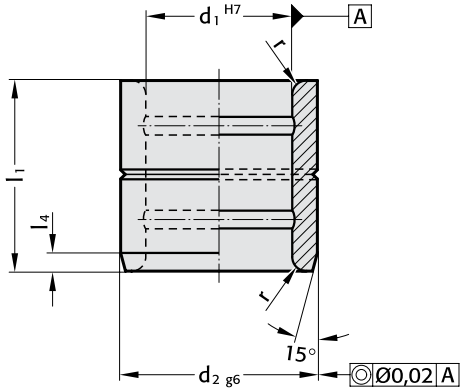

Ordering Code (example):

Guide bush	=	3120.70.
d_1 = 40 mm	=	040.
d_2 = 50 mm	=	050
l_1 = 80 mm	=	080
Order number	=	3120.70.040.050.080

Ordering Code (example):

Guide bush	=	3120.71.
d_1 = 40 mm	=	040.
d_2 = 50 mm	=	050
l_1 = 80 mm	=	080
Order number	=	3120.71.040.050.080

Material:

3120.70.	Bronze with Non-Liquid lubricant, low maintenance.
3120.71.	Bronze

Note:

Recommended holding fixture bore H7.
Bushes can be used radially and axially.

Fixing:

Connecting with adhesive or if needed secure with threaded pin or flat mushroom head screw 2192.61.

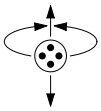

Direction of Motion
Embedded non-liquid lubricant
(section)

3120.70. / 3120.71.

d_1	50	55	60	63	65	70	75	80	85	90	100	110	120	125	130	140	150	160
d_2	60/62/65	70	74/75	75	80	85/90	90/95	96/100	100	110	120	130	140	145	150	160	170	180
r	1,5	2	2	2	2	2	2	2	2	2	2	2	2	2	2	2	2	2
l_4	4	4	4	4	4	4	4	4	4	4	4	4	4	4	4	4	4	4
l_1 30	●/●/●		●/●															
35	●/●/–		●/●			●/–												
37																		
40	●/●/●	●	●/●			●/–		●/●										
47																		
50	●/●/●	●	●/●		●	●/●		●/●										
60	●/●/●	●	●/●	●	●	●/●	●/●	●/●		●	●							
70	●/●/●	●	●/●	●	●	●/●	●/●	●/●		●	●							
77																		
80	●/–/●		●/●	●	●	●/●	●/●	●/●	●	●	●	●	●					
95	●/–/–																	
100	–/–/●		–/●			●/–	●/●	●/●		●	●	●	●	●	●	●	●	●
120				●				●/●		●	●	●	●	●	●			
130															●			
140								–/●			●		●			●		
150																	●	●

Material:

Steel with solid lubricant
surface: case hardened
580+40 HV 30

Steel
surface: case hardened
700+60 HV 30

Operating temperature up to 200°C.

3131.40.

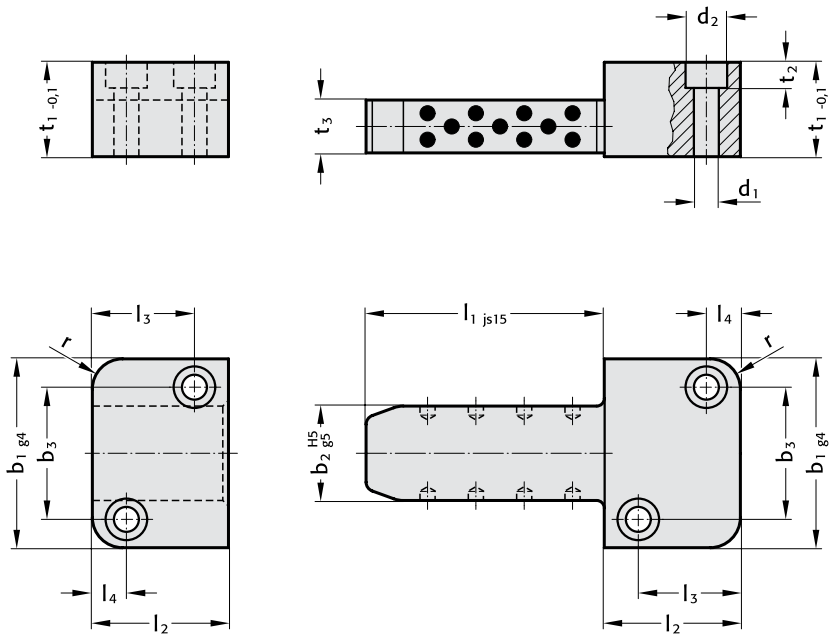

3131.40.

Order No	l_2	b_2	l_1	r	t_3	t_2	t_1	d_2	d_1	l_4	l_3	b_3	b_1
3131.40.022.016.020	22	16	20	6	11	6,8	20	11	6,6	7	15	26	40
.040			40										
3131.40.027.020.025	27	20	25	6	13	6,8	22	11	6,6	7	19	31	45
.025			50										
3131.40.036.025.032	36	25	32	8	14	6,8	25	11	6,6	9	27	35	50
.063			63										
3131.40.046.032.040	46	32	40	8	19	9	32	15	9	11	35	45	63
.080			80										
3131.40.056.040.050	56	40	50	10	22	11	36	18	11	15	40	60	85
.100			100										
3131.40.066.050.056	66	50	56	10	24	13	40	20	14	18	48	74	100
.112			112										

Ordering Code (example):

Rectangular guide	= 3131.40.
l_2 = 22 mm	= 022.
b_2 = 16 mm	= 016.
l_1 = 40 mm	= 040
Order no.	= 3131.40.022.016.040

3131.80. Rectangular Guides with Rollers

3131.80.

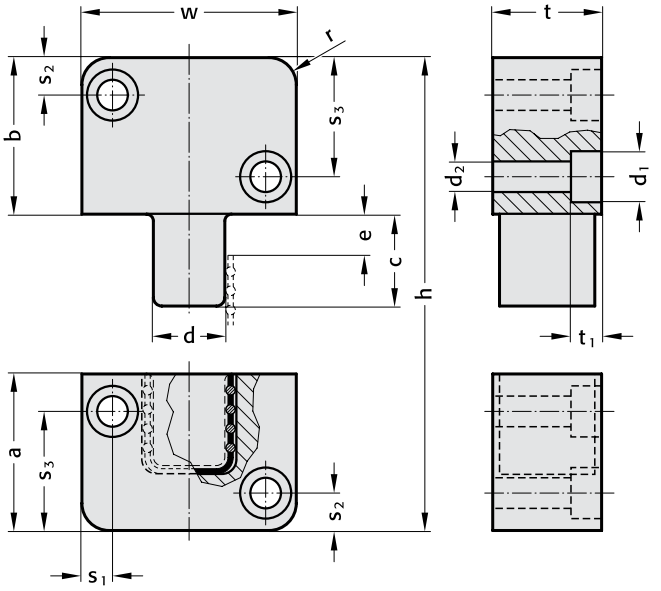

Material:

Steel
Hardness: ~56-58 HRC
Surface: burnished

Description:

The rectangular guides with rollers guarantee the greatest precisionwhen their mould is moved together. The rectangular guides must always be installed in the outer area of the mould plates to ensure problem-free functionality.

The maximum operating temperature is 150°C.

Advantages: no play or friction, low maintenance and no lubrication

3131.80.

Order No	t	w	a	b	c	d	e	h	r	s_1	s_2	s_3	d_1	d_2	t_1
3131.80.032.063	32	63	46	46	27	21	12,1	92	8	9	11	35	15	9	9
3131.80.040.100	40	100	66	66	36	33	19,5	132	10	13	18	48	20	13,5	13

Ordering Code (example):

Rectangular guide with rollers	=	3131.80.
t = 32 mm	=	032.
w = 63 mm	=	063
Order number	=	3131.80.032.063

Forming / Demoulding

Sliders for transverse bolt guides

2967.11.□□.00.1
2967.11.□□.00.2

2967.11.□□.00.1 Standard

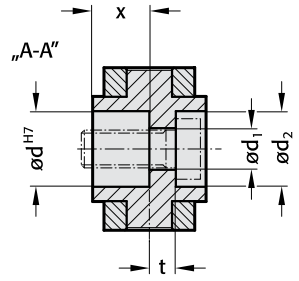

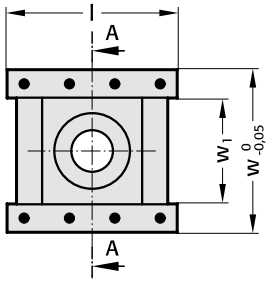

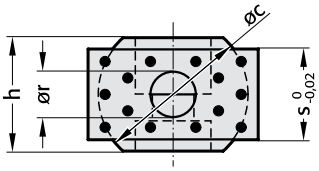

Ordering Code (example):

Profiled guide	=	2967.11.
ød = 8 mm	=	08.
Slide angle = 0°	=	00.
Standard = 1	=	1
Order number	=	2967.11.08.00.1

Material:

Guide strips: Bronze with non-liquid lubrication
bolt fixture: C45, burnished

Description:

Profiled guide for individual assembly of inclined bolt guides, low maintenance.

Bolt fixture with rotating bearing for work angle up to max. 30°.

Model 2967.11.□□.00.2
with adjusting mechanism for inclined bolts.

Order socket head screws ISO 4762 separately.

Delivery includes a locking pin as a guide piece anti-twist protection of guide pillar.

2967.11.□□.00.2 with adjusting screw

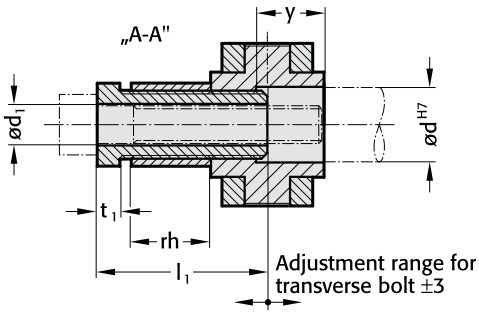

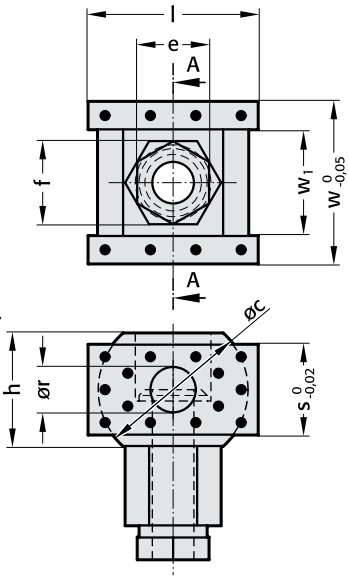

Ordering Code (example):

Profiled guide		=	2967.11
ød	= 16 mm	=	.16
Slide angle	= 0°	=	.00
with adjusting screw	= 2	=	.2
Order numbera		=	2967.11.16.00.2

2967.11.□□.00.1 / 2967.11.□□.00.2

Order No	ød	w	w1	l	l1	s	h	øc	ør	d1	d2	t	t1	e	f	rh	x	y	Socket head srew
2967.11.08.00.1	8	24	12	25	–	13	16	20	7	5	8	3,5	–	–	–	–	8	–	M 4x10
2967.11.10.00.1	10	28	14	32	–	17	16	20	8	6	10	3	–	–	–	–	8	–	M 5x12
2967.11.12.00.1	12	31	17	40	–	20	20	25	10	7	12	3,5	–	–	–	–	10	–	M 6x16
2967.11.16.00.1	16	36	21	45	–	24	24	30	14	9	16	5	–	–	–	–	12	–	M 8x20
2967.11.20.00.1	20	43	28	45	–	24	30	40	14	11	20	7	–	–	–	–	15	–	M10x25
2967.11.25.00.1	25	48	33	50	–	26	35	45	14	14	25	8	–	–	–	–	17,5	–	M12x30
2967.11.30.00.1	30	55	38	60	–	30	38	50	16	14	25	7,5	–	–	–	–	19	–	M12x30
2967.11.35.00.1	35	64	44	70	–	34	40	55	18	14	25	8	–	–	–	–	20	–	M12x30
2967.11.40.00.1	40	72	50	80	–	38	43	60	20	18	32	8	–	–	–	–	21,5	–	M16x35
2967.11.16.00.2	16	36	21	45	42	24	24	30	14	9	–	–	6	14	17	21	12	15	M 8x60
2967.11.20.00.2	20	43	28	45	45	24	30	40	13	11	–	–	6	19	22	21	15	18,5	M10x60
2967.11.25.00.2	25	48	33	50	49	26	35	45	16	13	–	–	7	22	27	21,5	17,5	20,5	M12x70
2967.11.30.00.2	30	55	38	60	55	30	38	50	18	13	–	–	7	27	32	26	19	22	M12x70
2967.11.35.00.2	35	64	44	70	58	34	40	55	18	14	–	–	7	32	36	28	20	23	M12x80
2967.11.40.00.2	40	72	50	80	60,5	38	43	60	20	17	–	–	7	38	41	29	21,5	24,5	M16x90

subject to alterations

2967.10. Bolt Guides

2967.10.

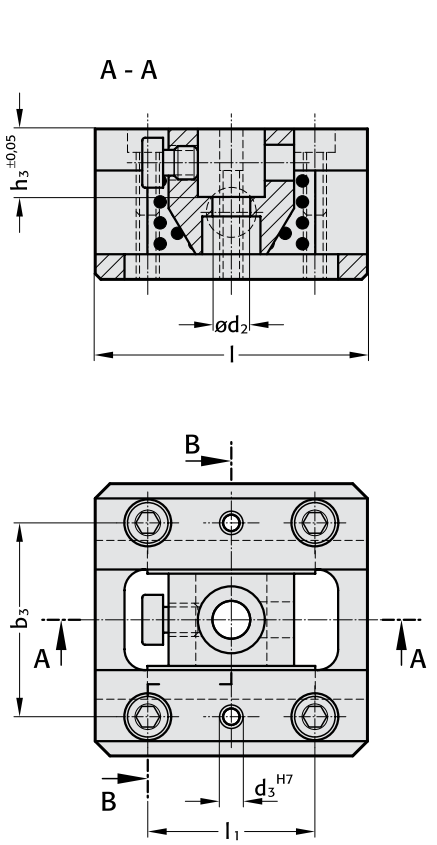

Application examples:

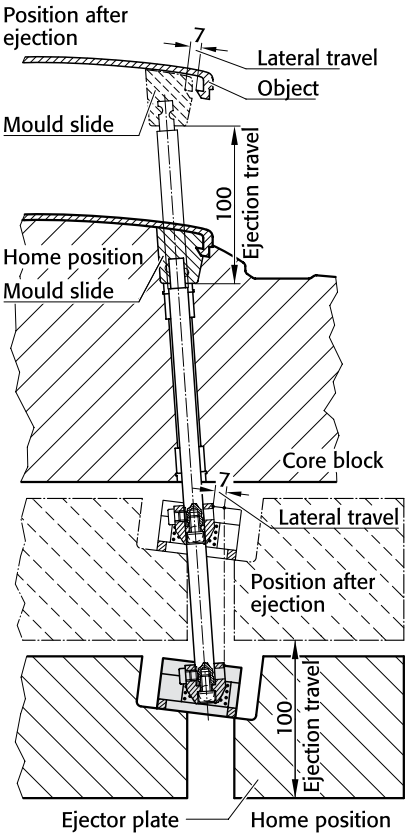

Mounting example:

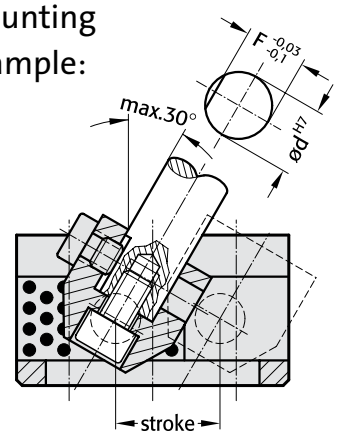

Ordering Code (example):

Bolt Guide	=	2967.10.
ød = 8 mm	=	08.
Stroke = 10 mm	=	010
Order No	=	2967.10.08.010

2967.10.

Order No	ød	Stroke	b	l	h	b_1	b_2	b_3	l_1	h_1	h_2	h_3	$ød_1$	$ød_2$	$ød_3$	F
2967.10.08.010	8	10	33	32	22	30	19	24	20	5	7	8	8	4	3	7
10.018	10	18	45	45	27	40	25	32	30		8	10	10	5	4	9
12.020	12	20	57	50	32	51	31	39	35	7	10	12	11	7	6	11
16.025	16	25	65	65	36	58	38	46	40	8		16	14	9		14,5
20.030	20	30	80	80	42	72	44	56	55	11	12	20	17	11	8	18
25.035	25	35	93	90	50	85	52	66	65	15	15	25	20	14	10	22,5
30.040	30	40	101	100	55	93	60	74	70			30				27
35.045	35	45	120	120	62	110	70	85	80		18	35				32
40.050	40	50	130	135	70	120	80	95	90			40	26	17,5		36
45.055	45	55	140	150	80	130	90	105	110		20	45				40

Hardened Ejector Pins - DIN ISO 6751

237.1.

237.1.

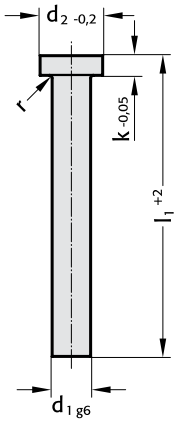

Description of FIBRO materials for tool and die components see pages E 10–E 11.

Material:

WS
Order No: 237.1.
Hardness: Shaft 60±2 HRC
Head 45±5 HRC

Execution:

DIN ISO 6751
Shank hardened and precision ground.
Head hot upset-forged.

Ordering Code (example):

Ejector Pin	=	237.
Material WS	=	1.
d_1 = Ø 4,0 mm	=	0400.
l_1 = 200 mm	=	200
Order No	=	237.1.0400.200

237.1.

				l_1														
d_1	d_2	k	r	40	63	80	100	125	160	200	250	315	400	500	630	800	1000	1250	1600
1	2,5	1,2	0,2	●	●	●	●	●	●	●									
1,1				●	●	●	●	●	●	●									
1,2				●	●	●	●	●	●	●									
1,3	3	1,5		●	●	●	●	●	●	●									
1,4				●	●	●	●	●	●	●									
1,5				●	●	●	●	●	●	●									
1,6				●	●	●	●	●	●	●									
1,7				●	●	●	●	●	●	●									
1,8				●	●	●	●	●	●	●									
1,9				●	●	●	●	●	●	●									
2	4	2		●	●	●	●	●	●	●	●	●							
2,2							●	●	●	●	●	●							
2,5	5		0,3	●	●	●	●	●	●	●	●	●							
2,7							●	●	●	●	●	●							
3	6	3		●	●	●	●	●	●	●	●	●	●	●					
3,2							●	●	●	●	●	●	●						
3,5	7						●	●	●	●	●	●	●						
3,7							●	●	●	●	●	●	●						
4	8			●	●	●	●	●	●	●	●	●	●	●					
4,2							●	●	●	●	●	●	●						
4,5							●	●	●	●	●	●	●						
4,7							●	●	●	●	●	●	●						
5	10			●	●	●	●	●	●	●	●	●	●	●	●	●			
5,2							●	●	●	●	●	●	●	●					
5,5							●	●	●	●	●	●	●	●					
6	12	5	0,5	●	●	●	●	●	●	●	●	●	●	●	●	●			
6,2							●	●	●	●	●	●	●	●	●				
6,5							●	●	●	●	●	●	●	●					
7							●	●	●	●	●	●	●	●	●				
8	14				●	●	●	●	●	●	●	●	●	●	●	●	●	●	●
8,2							●	●	●	●	●	●	●	●	●	●			
8,5							●	●	●	●	●	●	●	●	●				
9							●	●	●	●	●	●	●	●	●				
10	16					●	●	●	●	●	●	●	●	●	●	●	●	●	●
10,2							●	●	●	●	●	●	●	●	●				
10,5							●	●	●	●	●	●	●	●	●				
11									●	●	●	●	●	●	●				
12	18	7	0,8			●	●	●	●	●	●	●	●	●	●	●	●		
12,2								●	●	●	●	●	●	●					
12,5							●	●	●	●	●	●	●	●	●				
14	22					●	●	●	●	●	●	●	●	●	●	●	●		
16							●	●	●	●	●	●	●	●	●	●	●		
18	24								●	●	●	●	●	●	●				
20	26	8	1,0						●	●	●	●	●	●	●	●	●		

subject to alterations

FIBRO

237.8. Hotwork Precision Ejector Pins - Nitrided DIN ISO 6751

Material:

NWA

Order No:		237.8.
Hardness:	Shaft*	≧950 HV 0,3
	Head	45±5 HRC
Tensile Strength (core)		>1400 N/mm²

Execution:

DIN ISO 6751
Shank nitrided and precision ground.
Head hot upset-forged.

* Owing to thinness of nitrided skin, hardness testing on shank restricted to Vickers only. Test load = 3 N max.

Ordering Code (example):

Ejector Pin	= 237.
Material NWA	= 8.
d_1 = Ø 2,50 mm	= 0250.
l_1 = 160 mm	= 160
Order No	= 237.8.0250.160

237.8.

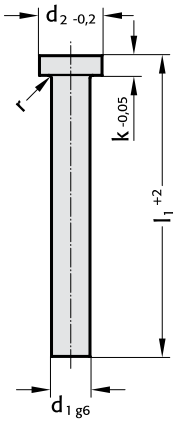

Description of FIBRO materials for tool and die components see pages E 10–E 11.

237.8.

d_1	d_2	k	r	l_1 100	125	160	200	250	315	400	500	630	800	1000
1,5	3	1,5	0,2	●	●	●	●							
2	4	2		●	●	●	●	●						
2,2				●	●	●	●							
2,4	5	2		●	●	●	●	●	●					
2,5			0,3	●	●	●	●	●	●					
2,7				●	●	●	●							
2,9				●	●	●	●	●	●					
3	6	3		●	●	●	●	●	●	●	●			
3,2				●	●	●	●	●	●	●				
3,4				●	●	●	●	●	●					
3,5	7			●	●	●	●	●	●	●				
3,7				●	●	●	●	●	●	●				
3,9				●	●	●	●	●	●					
4	8			●	●	●	●	●	●	●	●			
4,2				●	●	●	●	●	●	●				
4,4				●	●	●	●	●	●					
4,5				●	●	●	●	●	●	●				
4,7				●	●	●	●	●	●					
4,9				●	●	●	●	●	●					
5	10			●	●	●	●	●	●	●	●	●	●	
5,2				●	●	●	●	●	●	●	●			
5,4				●	●	●	●	●	●					
5,5				●	●	●	●	●	●	●	●			
5,7				●	●	●	●	●	●					
5,9				●	●	●	●	●	●					
6	12	5	0,5	●	●	●	●	●	●	●	●	●	●	
6,2				●	●	●	●	●	●	●	●	●		
6,5				●	●	●	●	●	●	●	●			
6,7				●	●	●	●	●	●					
6,9				●	●	●	●	●	●					
7				●	●	●	●	●	●	●	●	●		
7,2				●	●	●	●	●	●					
7,8				●	●	●	●	●	●					
8	14			●	●	●	●	●	●	●	●	●	●	●
8,2				●	●	●	●	●	●	●	●	●	●	
8,4				●	●	●	●	●	●					
8,5				●	●	●	●	●	●	●	●	●		
9				●	●	●	●	●	●	●	●	●		
9,7				●	●	●	●	●	●					
10	16			●	●	●	●	●	●	●	●	●	●	●
10,2				●	●	●	●	●	●	●	●	●	●	
10,5				●	●	●	●	●	●	●	●	●		
11				●	●	●	●	●	●	●	●	●		
12	18	7	0,8	●	●	●	●	●	●	●	●	●	●	●
12,2				●	●	●	●	●	●	●	●	●	●	
12,5				●	●	●	●	●	●	●	●	●	●	
14	22			●	●	●	●	●	●	●	●	●	●	●
16				●	●	●	●	●	●	●	●	●	●	●
18	24					●	●	●	●	●	●	●	●	●
20	26	8	1,0			●	●	●	●	●	●	●	●	●
25	32	10					●	●	●	●	●	●	●	●
32	40						●	●	●	●	●	●	●	●

Hardened Ejector Pins
DIN ISO 8694

238.1.

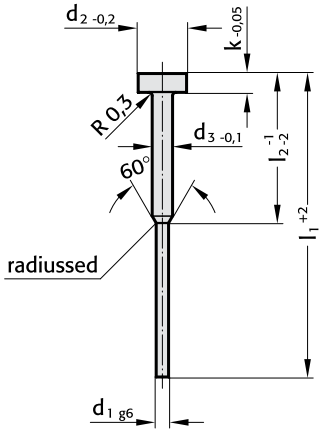

Execution:

DIN ISO 8694,
Shank hardened and precision ground.
Head hot upset-forged.

Material:

WS

Order No:		238.1.
Hardness:	Shaft	60±2 HRC
	Head	45±5 HRC

Ordering Code (example):

Ejector Pin	= 238.
Material WS	= 1.
d_1 = ∅ 1,5 mm	= 0150.
l_1 = 125 mm	= 125
Order No	= 238.1.0150.125

Description of FIBRO materials for tool and die components
see pages E 10–E 11.

238.1.

d_1	d_2	d_3	k	l_1 / l_2	63 / 30	80 / 32	100 / 50	125 / 50	160 / 63	200 / 80
0,8	4	2	2		●	●	●	●	●	
0,9					●	●	●	●	●	
1					●	●	●	●	●	●
1,1					●	●	●	●	●	●
1,2					●	●	●	●	●	●
1,3					●	●	●	●	●	●
1,4					●	●	●	●	●	●
1,5	6	3	3		●	●	●	●	●	●
1,6						●	●	●	●	●
1,7						●	●	●	●	●
1,8						●	●	●	●	●
1,9						●	●	●	●	●
2						●	●	●	●	●
2,1							●	●	●	●
2,2						●	●	●	●	●
2,3							●	●	●	●
2,4							●	●	●	●
2,5							●	●	●	●

subject to alterations

FIBRO

238.8.

Hotwork Precision Ejector Pins Nitrided DIN ISO 8694

238.8.

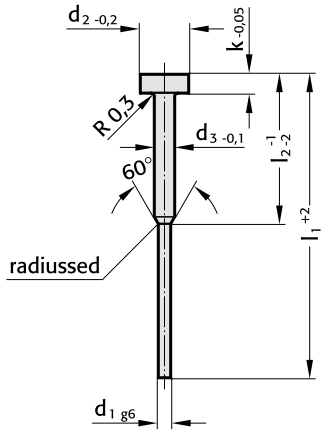

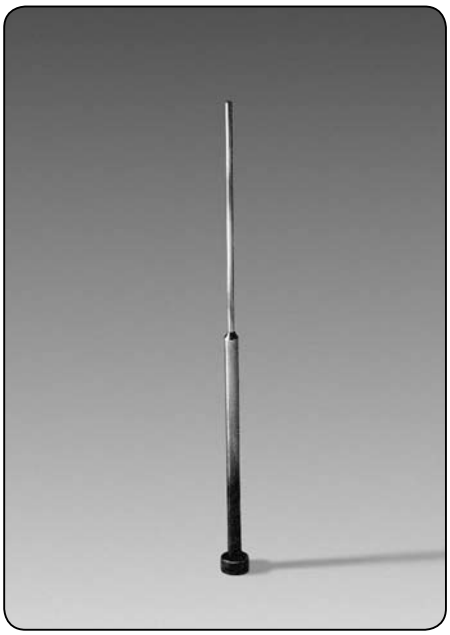

Material:

NWA

Order No:		238.8.
Hardness:	Shaft*	≧950 HV 0,3
	Head	45±5 HRC
Tensile Strength (core)		>1400 N/mm²

* Owing to thinness of nitrided skin, hardness testing on shank restricted to Vickers only. Test load = 3 N max.

Description of FIBRO materials for tool and die components see pages E 10–E 11.

Execution:

DIN ISO 8694,
Shank precision ground, nitrided.
Head hot upset-forged.

238.8.

				l_1	63	80	100	125	160	200
d_1	d_2	d_3	k	l_2	30	32	50	50	63	80
0,8	4	2	2		●	●	●	●	●	
0,9					●	●	●	●	●	
1					●	●	●	●	●	
1,1					●	●	●	●	●	
1,2					●	●	●	●	●	
1,3					●	●	●	●	●	
1,4					●	●	●	●	●	
1,5	6	3	3		●	●	●	●	●	●
1,6						●	●	●	●	●
1,7						●	●	●	●	●
1,8						●	●	●	●	●
1,9						●	●	●	●	●
2						●	●	●	●	●
2,2						●	●	●	●	●
2,5							●	●	●	●

Ordering Code (example):

Ejector Pin	=	238.
Material NWA	=	8.
d_1 = ∅ 1,5 mm	=	0150.
l_1 = 125 mm	=	125
Order No	=	238.8.0150.125

Hardened Ejector Pins - Conical Head
similar to DIN 1530 Shape D

239.1.

239.1.

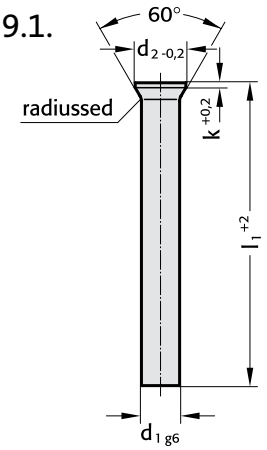

Execution:

similar to DIN 1530 Shape D,
Shank hardened and precision ground.
Head hot upset-forged.

Material:

WS
Order No: 239.1.
Hardness: Shaft 60±2 HRC
Head 45±5 HRC

Description of FIBRO materials for tool and die components
see pages E 10–E 11.

239.1.

d_1	d_2	k	l_1 40	60	71	80	100	125	160	200	250
0,8	1,4	0,5					●	●	●	●	
0,9	1,6						●	●	●	●	
1	1,8		●	●	●	●	●	●	●	●	
1,1					●		●	●	●	●	
1,2	2				●		●	●	●	●	
1,25							●	●	●	●	
1,3					●		●	●	●	●	
1,4	2,2				●		●	●	●	●	
1,5			●	●	●	●	●	●	●	●	
1,6	2,5				●		●	●	●	●	
1,7					●		●	●	●	●	
1,75	2,8						●	●	●	●	
1,8					●		●	●	●	●	
1,9					●		●	●	●	●	
2	3		●	●	●	●	●	●	●	●	●
2,1	3,2				●		●	●	●	●	
2,2					●		●	●	●	●	●
2,25							●	●	●	●	
2,3	3,5				●		●	●	●	●	
2,4					●		●	●	●	●	
2,5			●	●	●	●	●	●	●	●	●
2,6	4				●		●	●	●	●	
2,7					●		●	●	●	●	●
2,75					●		●	●	●	●	
2,8					●		●	●	●	●	
2,9					●		●	●	●	●	

Ordering Code (example):

Ejector Pin	= 239.
Material WS	= 1.
d_1 = ∅ 1,5 mm	= 0150.
l_1 = 160 mm	= 160
Order No	= 239.1.0150.160

239.1.

d_1	d_2	k	l_1 40	60	71	80	100	125	160	200	250	315
3	4,5	0,5	●	●	●	●	●	●	●	●	●	●
3,1					●		●	●	●	●		
3,2					●		●	●	●	●		
3,25					●		●	●	●	●		
3,5	5,0				●	●	●	●	●	●	●	●
3,6					●		●	●	●	●		
3,75							●	●	●	●		
4	5,5		●	●	●	●	●	●	●	●	●	●
4,1					●		●	●	●	●		
4,2					●		●	●	●	●		
4,25							●	●	●	●		
4,5	6				●		●	●	●	●		
4,6					●		●	●	●	●		
5	6,5		●	●	●	●	●	●	●	●	●	●
5,1					●		●	●	●	●		
5,2					●		●	●	●	●		
5,25							●	●	●	●		
5,5	7			●	●	●	●	●	●	●	●	●
6	8		●	●	●	●	●	●	●	●	●	●
6,2	8	1				●	●	●	●	●	●	●
6,5	9	1			●	●	●	●	●	●	●	●
7					●	●	●	●	●	●	●	●
7,5	10				●		●	●	●	●	●	●
8				●	●	●	●	●	●	●	●	●
8,2	10						●	●	●	●	●	●
8,5	11				●		●	●	●	●	●	●
9					●		●	●	●	●	●	●
10	12				●	●	●	●	●	●	●	●
12	14					●	●	●	●	●	●	●
14	16	1,5					●	●	●	●	●	●
16	18						●	●	●	●	●	●

subject to alterations

FIBRO

239.8.

Hotwork Precision Ejector Pins
Nitrided - similar to DIN 1530 Shape D

239.8.

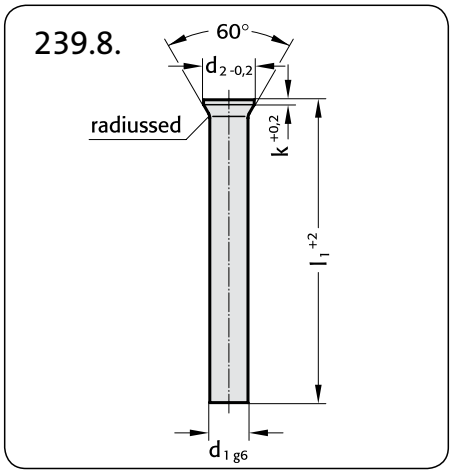

Material:

NWA

Order No:		239.8.
Hardness:	Shaft*	≧950 HV 0,3
	Head	45±5 HRC
Tensile Strength (core):		>1400 N/mm²

* Owing to thinness of nitrided skin, hardness testing on shank restricted to Vickers only. Test load = 3 N max.

Description of FIBRO materials for tool and die components see pages E 10–E 11.

Execution:

similar to DIN 1530 Shape D.

Shank precision ground, nitrided.

Head hot upset-forged.

239.8.

d_1	d_2	k	l_1 100	125	160	200	250	315
3	4,5	0,5	●	●	●	●	●	
4	5,5		●	●	●	●	●	●
5	6,5		●	●	●	●	●	●
6	8		●	●	●	●	●	●
8	10	1	●	●	●	●	●	●
10	12		●	●	●	●	●	●
12	14		●	●	●	●	●	●
14	16	1,5			●	●	●	●
16	18				●	●	●	●

Ordering Code (example):

Ejector Pin	= 239.
Material NWA	= 8.
d_1 = ∅ 6,0 mm	= 0600.
l_1 = 160 mm	= 160
Order No	= 239.8.0600.160

Blade Precision Ejectors - Hardened similar to DIN ISO 8693

FIBRO

263.1.

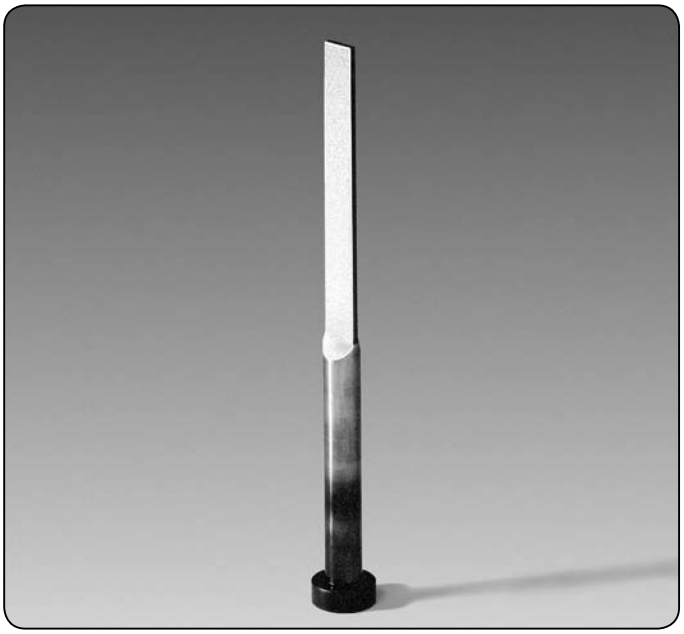

263.1.

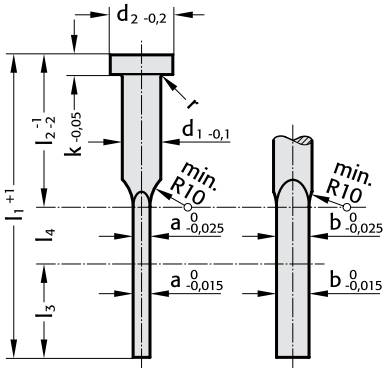

Execution:

Blade and Shank hardened and precision ground.

Head hot upset-forged.

Material:

WS

Order No:		263.1.
Hardness:	Shaft	60±2 HRC
	Head	45±5 HRC

Ordering Code (example):

Blade Ejector	= 263.
Material WS	= 1.
a × b = 1,5×5,5 mm	= 15.055.
l_1 = 125 mm	= 125
Order No	= 263.1.15.055.125

Description of FIBRO materials for tool and die components see pages E 10–E 11.

263.1.

d_1				4	4,2	4,2	4,2	5	5	5	6	6	6	6	8	8	8	10	10	12	12
d_2				8	8	8	8	10	10	10	12	12	12	12	14	14	14	16	16	18	18
k				3	3	3	3	3	3	3	5	5	5	5	5	5	5	5	5	7	7
r				0,3	0,3	0,3	0,3	0,3	0,3	0,3	0,5	0,5	0,5	0,5	0,5	0,5	0,5	0,5	0,5	0,8	0,8
a				1	0,8	1	1,2	1	1,2	1,5	1,0	1,2	1,5	2	1,2	1,5	2	1,5	2	2	2,5
b				3,5	3,8	3,8	3,8	4,5	4,5	4,5	5,5	5,5	5,5	5,5	7,5	7,5	7,5	9,5	9,5	11,5	11,5
l_1	l_2	l_3	l_4																		
63	30	25	10	●	●	●															
80	40	30	10	●	●	●	●	●	●		●	●									
100	50	40	10	●	●	●	●	●	●	●	●	●	●	●	●						
125	60	50	15	●	●	●	●	●	●	●	●	●	●	●	●	●					
160	80	50	30			●	●	●	●	●	●	●	●	●	●	●	●	●			
200	100	60	40				●	●	●	●	●	●	●	●	●	●	●	●	●	●	●
250	125	60	65												●	●	●	●	●	●	●
315	160	70	85																●	●	●

Special dimensions a and b available on request.

subject to alterations

FIBRO

263.8.

Hotwork Blade Precision Ejectors - Nitrided
similar to DIN ISO 8693

263.8

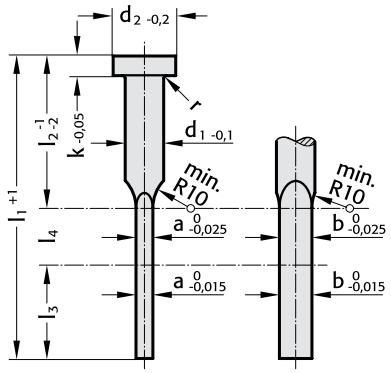

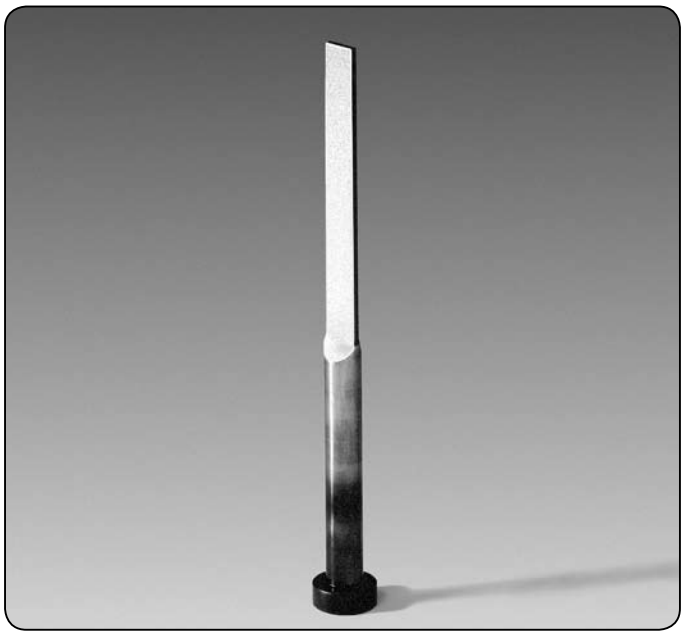

Material:

NWA

Order No:		263.8.
Hardness:	Shaft*	≧ 950 HV 0,3
	Head	45±5 HRC
Tensile Strength (core):		> 1400 N/mm²

* Owing to thinness of nitrided skin, hardness testing on shank restricted to Vickers only. Test load = 3 N max.

Description of FIBRO materials for tool and die components see pages E 10–E 11.

Execution:

Blade and Shank precision ground and nitrided.
Head hot upset-forged.

Ordering Code (example):

Blade Ejector	=	263.
Material NWA	=	8.
a × b = 1,0 × 3,5 mm	=	10.035.
l_1 = 100 mm	=	100
Order No	=	263.8.10.035.100

263.8.

d_1				4	4,2	4,2	4,2	5	5	5	6	6	6	6	8	8	8	10	10	12	12	16	16
d_2				8	8	8	8	10	10	10	12	12	12	12	14	14	14	16	16	18	18	22	22
k				3	3	3	3	3	3	3	5	5	5	5	5	5	5	5	5	7	7	7	7
r				0,3	0,3	0,3	0,3	0,3	0,3	0,3	0,5	0,5	0,5	0,5	0,5	0,5	0,5	0,5	0,5	0,8	0,8	0,8	0,8
a				1	0,8	1	1,2	1	1,2	1,5	1,0	1,2	1,5	2	1,2	1,5	2	1,5	2	2	2,5	2	2,5
b				3,5	3,8	3,8	3,8	4,5	4,5	4,5	5,5	5,5	5,5	5,5	7,5	7,5	7,5	9,5	9,5	11,5	11,5	15,5	15,5
l_1	l_2	l_3	l_4																				
63	30	25	10	●	●	●																	
80	40	30	10	●	●	●	●	●	●		●	●											
100	50	40	10	●	●	●	●	●	●	●	●	●	●		●								
125	60	50	15		●	●	●	●	●	●	●	●	●	●	●	●							
160	80	50	30			●	●	●	●	●	●	●	●	●	●	●	●	●					
200	100	60	40							●			●	●	●	●	●	●	●	●	●	●	●
250	125	60	65													●	●	●	●	●	●	●	●
315	160	70	85														●	●	●	●	●	●	●
400	200	95	105																●	●	●	●	●

Special dimensions a and b available on request.

Precision-Ejector Sleeves - Hardened - DIN ISO 8405

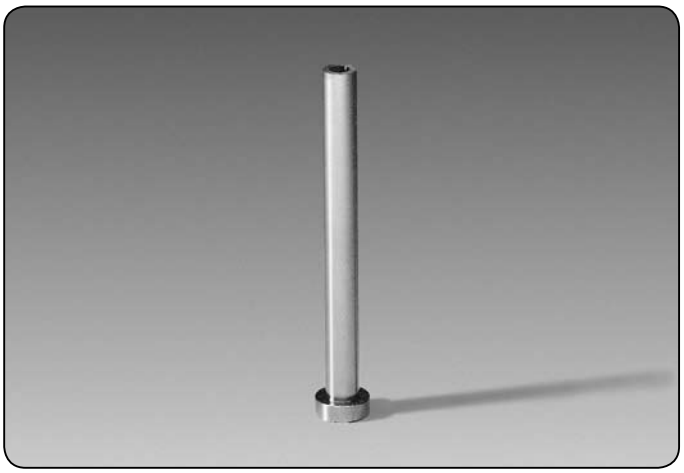

264.1.

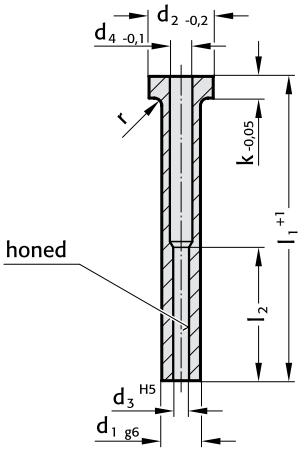

Execution:

Body hardened and precision ground on O.D.

Head hot upset-forged,

Guide bore precision ground and honed.

Material:

WS

Order No:		264.1.
Hardness:	Shaft	60±2 HRC
	Head	45±5 HRC

Description of FIBRO materials for tool and die components see pages E 10–E 11.

264.1.

							l_1											
d_1	d_3	d_4	d_2	k	r	l_2	70	75	80	90	100	125	150	175	200	225	250	275
2,5	1,25	1,6	5	2	0,3	20	●		●	●	●							
3	1,5	1,8	6	3		35		●			●	●	●					
	1,6	1,9						●			●	●	●	●				
4	2	2,4	8					●			●	●	●	●	●	●		
	2,2							●			●	●	●	●	●	●		
5	2,5	3	10					●			●	●	●	●	●	●		
	2,7					45		●			●	●	●	●	●	●		
	3	3,3						●			●	●	●	●	●	●	●	
	3,2	3,5						●			●	●	●	●	●	●	●	
6	3,5	4	12	5	0,5			●			●	●	●	●	●	●	●	
	3,7							●			●	●	●	●	●	●	●	
	4	4,3						●			●	●	●	●	●	●	●	●
8	4,2	5	14					●			●	●	●	●	●	●	●	●
	5	5,3						●			●	●	●	●	●	●	●	●
	5,2	5,5						●			●	●	●	●	●	●	●	●
10	6	6,3	16					●			●	●	●	●	●	●	●	●
	6,2	6,5						●			●	●	●	●	●	●	●	●
12	8	8,3	20	7	0,8			●			●	●	●	●	●	●	●	●
	8,2	8,5						●			●	●	●	●	●	●	●	●
14	10	10,3	22					●			●	●	●	●	●	●	●	●
	10,5	11						●			●	●	●	●	●	●	●	●
16	12	12,3						●			●	●	●	●	●	●	●	●
	12,5	13						●			●	●	●	●	●	●	●	●

Ordering Code (example):

Ejector Sleeve	= 264.
Material WS	= 1.
d_3 = ∅ 3,2 mm	= 0320.
l_1 = 150 mm	= 150
Order No	= 264.1.0320.150

subject to alterations

FIBRO

264.8. Hotwork Precision Ejector Sleeves - Nitrided - DIN ISO 8405

264.8.

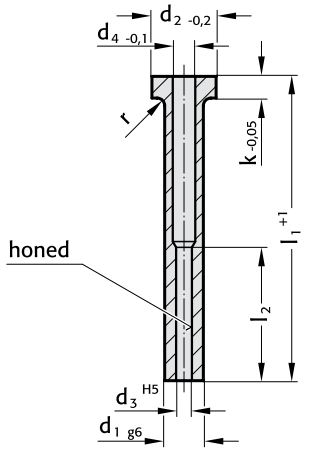

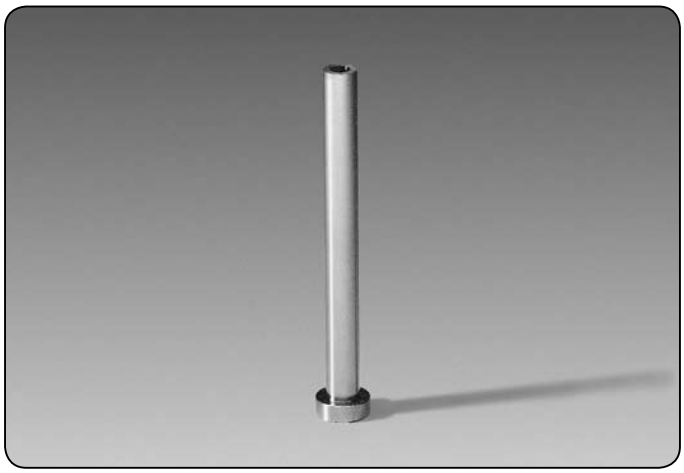

Material:

NWA

Order No		264.8.
Hardness:	Shaft* and	
	Bore	≧950 HV 0,3
	Head	45±5 HRC
Tensile Strength (core):		>1400 N/mm²

* Owing to thinness of nitrided skin, hardness testing on shank restricted to Vickers only. Test load = 3 N max.

Description of FIBRO materials for tool and die components see pages E 10–E 11.

Execution:

Body nitrided and precision ground on O.D.

Head hot upset-forged.

Guide bore precision ground and honed.

264.8.

							l_1								
d_1	d_3	d_4	d_2	k	r	l_2	75	100	125	150	175	200	225	250	275
3	1,5	1,8	6	3	0,3	35	●	●	●	●					
	1,6	1,9					●	●	●	●					
4	2	2,4	8				●	●	●	●					
	2,2						●	●	●	●					
5	2,5	3	10				●	●	●	●					
	2,7					45	●	●	●	●					
	3	3,3					●	●	●	●	●				
	3,2	3,5					●	●	●	●	●				
6	3,5	4	12	5	0,5		●	●	●	●	●				
	3,7						●	●	●	●	●				
	4	4,3					●	●	●	●	●	●			
8	4,2	5	14				●	●	●	●	●	●			
	5	5,3					●	●	●	●	●	●			
	5,2	5,5					●	●	●	●	●	●			
10	6	6,3	16				●	●	●	●	●	●	●	●	
	6,2	6,5					●	●	●	●	●	●	●	●	
12	8	8,3	20	7	0,8		●	●	●	●	●	●	●	●	●
	8,2	8,5					●	●	●	●	●	●	●	●	●
14	10	10,3	22					●	●	●	●	●	●	●	●
	10,2	10,5						●	●	●	●	●	●	●	●
16	12	12,3						●	●	●	●	●	●	●	●

Ordering Code (example):

Ejector Sleeve, nitrided	= 264.
Material NWA	= 8.
d_3 = ∅ 3,2 mm	= 0320.
l = 150 mm	= 150
Order No	= 264.8.0320.150

Date insert, complete – (standard version) embossed lettering

FIBRO

2280.01.

2280.01.

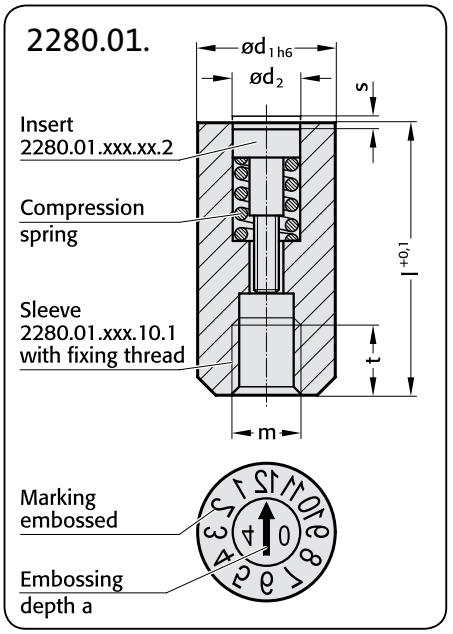

Installation example:

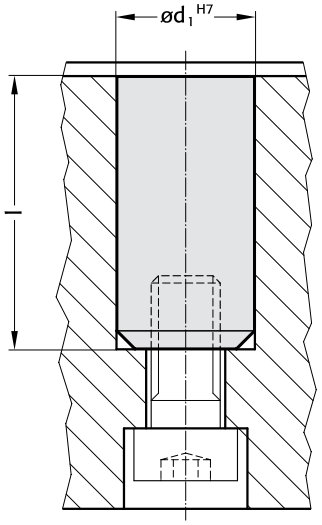

2280.01.

d1	d2	l	m	t	s	a
4	2,5	14	2	2	0,2	0,3
5	3,1	17	3	3	0,2	0,4
6	3,1	17	3	3	0,2	0,4
8	4,6	20	4	4	0,35	0,4
10	4,6	20	5	4	0,35	0,4
12	6,4	25	6	6	0,5	0,6
16	8,4	33	8	8	0,6	0,6

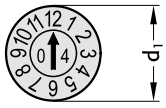

.10.1 = Sleeve
with display: Months (1-12)

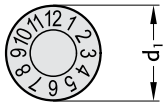

.xx.2 = Insert
with display: Arrow + year (variable) e.g. for 2004

Ordering examples:

Date insert, complete	= 2280.
Standard version	= 01.
Sleeve diameter d1 = 5	= 050.
Sleeve with display: Months (1-12)	= 10.
Insert with display: Arrow + year (variable) e.g. 2004	= 04
Order No	= 2280.01.050.10.04

Date insert, Sleeve	= 2280.
Standard version	= 01.
Sleeve diameter d1 = 5	= 050.
Sleeve with display: Months (1-12)	= 10.
Sleeve	= 1
Order No	= 2280.01.050.10.1

Date insert, Insert	= 2280.
Standard version	= 01.
Sleeve diameter d1 = 5	= 050.
Sleeve with display: Arrow + year (variable) e.g. 2004	= 04.
Insert	= 2
Order No	= 2280.01.050.04.2

Description:

- sleeve with engraving
- adjustable insert with display arrow and year (can be rotated using an ordinary srcrewdriver)
- metric thread for fixing
- mirror image engraving

Material:

1.2767, hardened HRC 54±2, ground

Note:

Sleeve and Insert can be ordered separately, see Ordering Code examle.

Mounting/dismantling:

Screw in the insert in a clockwise direction until it is flush with the top edge and set to the required position.

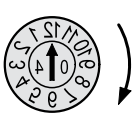

Setting:

Set the insert by turning clockwise or anti-clockwise. When correctly set, the insert of a stamp with d1 = 6 mm (.060.) is typically a maximum of 0.1 mm above or below the top edge of the sleeve.

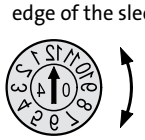

Changing:

To change the insert turn it anti-clockwise to remove.

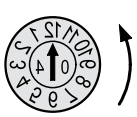

subject to alterations

FIBRO

2280.02.

Date insert, complete – (short version) embossed lettering

Installation example:

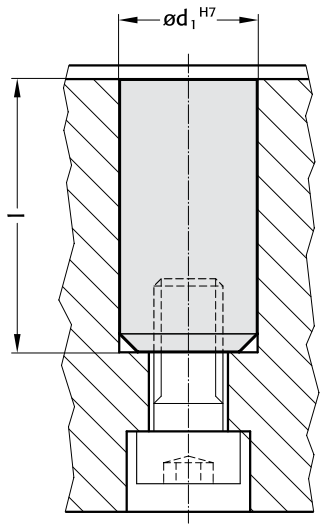

2280.02.

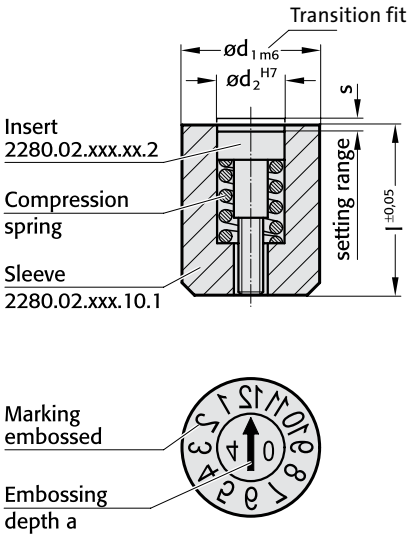

2280.02.

d1	d2	l	s	a
2,6	1,4	4	0,2	0,3
3	1,5	4	0,2	0,3
4	2,1	5	0,25	0,3
5	3,1	8	0,2	0,4
6	3,1	8	0,2	0,4
8	4,4	10	0,25	0,4
10	5,2	12	0,35	0,4
12	6,2	14	0,35	0,6

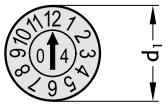

.10.1 = Sleeve
with display: Months (1-12)

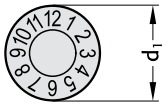

.xx.2 = Insert
with display: Arrow + year
(variable) e.g. for 2004

Ordering examples:

Date insert, complete	= 2280.
short version	= 02.
Sleeve diameter d1 = 5	= 050.
Sleeve with display: Months (1-12)	= 10.
Insert with display: Arrow + year (variablel) e.g. 2004	= 04
Order No	= 2280.02.050.10.04

Date insert, Sleeve	= 2280.
short version	= 02.
Sleeve diameter d1 = 5	= 050.
Sleeve with display: Months (1-12)	= 10.
Sleeve	= 1
Order No	= 2280.02.050.10.1

Date insert, Insert	= 2280.
short version	= 02.
Sleeve diameter d1 = 5	= 050.
Sleeve with display: Arrow + year (variable) e.g. 2004	= 04.
Insert	= 2
Order No	= 2280.02.050.04.2

Description:

- sleeve with engraving
- adjustable insert with display arrow and year (can be rotated using an ordinary srcrewdriver)
- metric thread for fixing
- mirror image engraving

Material:

1.2767, hardened HRC 54±2, ground

Note:

Sleeve and Insert can be ordered separately, see Ordering Code examle.

Mounting/dismantling:

Fixing:

Screw in the insert in a clockwise direction until it is flush with the top edge and set to the required position.

Setting:

Set the insert by turning clockwise or anti-clockwise. When correctly set, the insert of a stamp with d1 = 6 mm (.060.) is typically a maximum of 0.1 mm above or below the top edge of the sleeve.

Changing:

To change the insert turn it anti-clockwise to remove.

Quill holders for core tempering

3820.10.

3820.10.

Quill holder for core tempering

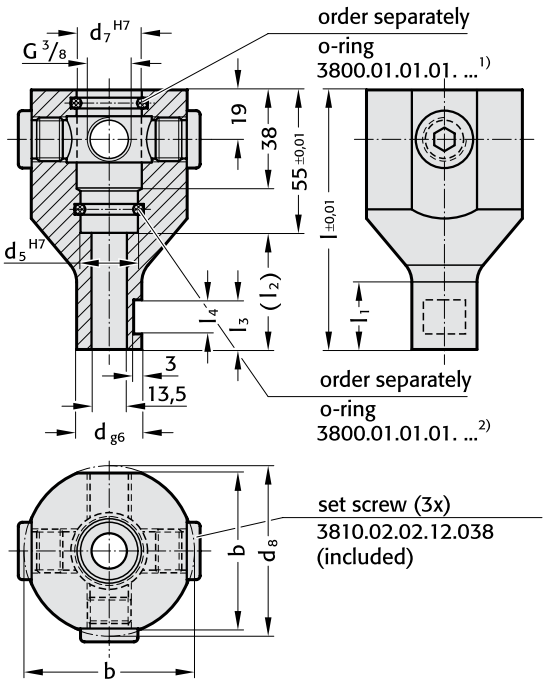

Material:

3820.10.
Quill holder: stainless steel

Description:

The quill holder is preferably used with bolt guide 2967.10. and quills with internal bore for slider tempering. 4 connections make it possible to implement tempering circuits either directly or in series.

3820.10.

Order No	d	d_7	d_8	d_5	b	l	l_1	l_2	l_3	l_4
3820.01.025.025	25	25	65	22	60	100	26	45	19	13
3820.01.030.030	30	30	70	27	65	105	31	50	22	14,5
3820.01.040.040	40	40	80	37	70	115	41	60	28	16,5

Ordering code (example):

Quil holder	= 3820.10.
d = 25 mm	= 025.
d_7 = 25 mm	= 025
Order No	= 3820.10.025.025

Installation options

1. Swivelled
   Slider without sealing surfaces

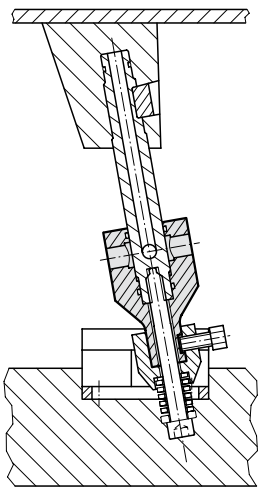

2. Swivelled
   Slider with sealing surfaces

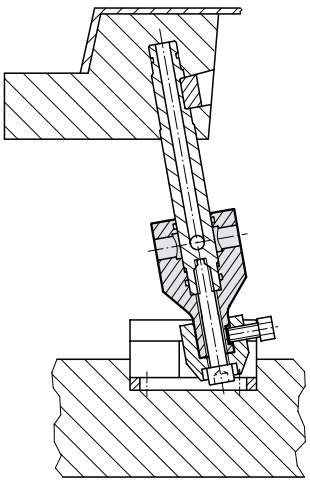

3. Not swivelled
   Slider without sealing surfaces

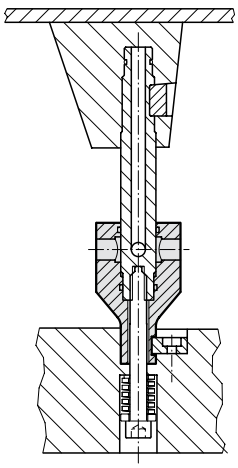

4. Not swivelled
   Slider with sealing surfaces

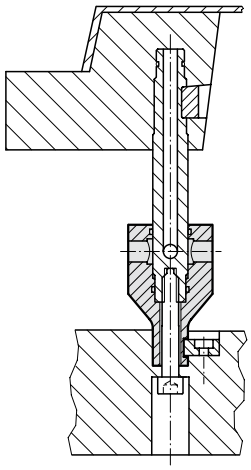

subject to alterations

3800.01.01.01. O-Rings

3800.01.01.01.

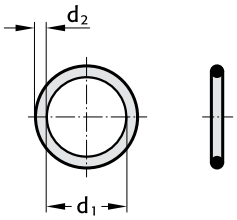

3800.01.01.01.

Order No	d_1	d_2	for
3800.01.01.01.0240.30[1)]	24	3	3820.10.025.025
3800.01.01.01.0210.30[2)]	21	3	
3800.01.01.01.0292.30[1)]	29,2	3	3820.10.030.030
3800.01.01.01.0260.30[2)]	26	3	
3800.01.01.01.0392.30[1)]	39,2	3	3820.10.040.040
3800.01.01.01.0360.30[2)]	36	3	

Ordering code (example):

O-ring	= 3800.01.01.01.	
d_1 = 24 mm	=	0240.
d_2 = 3 mm	=	30
Order No	= 3800.01.01.01.0240.30	

Material:

Viton® (FPM)

Note:

Operating temperature -15°C to +200°C

subject to alterations

Mould Line Gas Springs and Spring Plungers for Mould Making

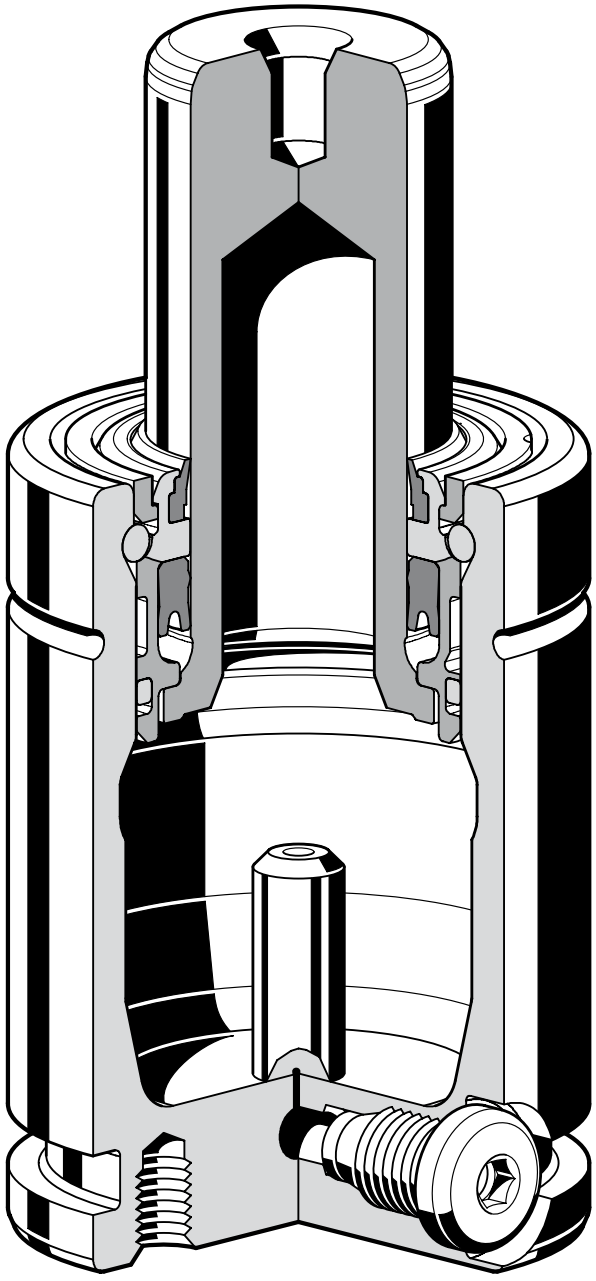

FIBRO Mould Line Gas Springs (FML)

FIBRO FML Gas Springs are an ideal supplement to and expansion of the traditional FIBRO product lines of helical, disc and elastomer springs for manufacturing tools, devices, moulds and machines.

Gas Springs can be used for all applications where lift movements are required in parallel to mould opening.

FIBRO Mould Line Gas Springs (FML), which were specially developed for mould making, are characterised by their high force, small size, long service life and a constant operating temperature of 120°C.

Of course, FIBRO FML Gas Springs are approved as per European Pressure Equipment Directive 97/23/EC (14th GSGV ordinance on pressure vessels). FIBRO FML Gas Springs are filled with nitrogen and do not require any pressure space that is positioned externally or in tool plates. They also require no gas supply lines.

In certain special cases, however, monitoring of charge pressure in the installed state is required. These may be found in the list of accessory products if needed. As long as all mounting details are laid out with due circumspection, it is no problem at all to remove and install FIBRO FML Gas Springs.

Operating instructions are included with every delivery of FIBRO FML Gas Springs. An application example is shown on page L57.

Functioning

The pressure medium is a commercially available, environment-friendly nitrogen. FIBRO FML Gas Springs have a standard charge pressure of max. 150 bar.

Pressure Build-Up

In operation the piston rod enters the spring space whose volume is progressively reduced. The resulting pressure rise can be plotted on the Gas Spring Diagram as a multiplication factor. The spring force is the product of initial force times that pressure-rise factor and can therefore be calculated easily.

Working Temperature

The spring temperature should not exceed +120°C.

Charge Pressure

Modification of charge pressure allows variation of the force rating and can be predetermined from the spring Diagram.

Installation

FIBRO FML Gas Springs can be used in any installation position. Whether or not external forces act on them when at rest is of no consequence.and can therefore be calculated easily.

All FIBRO Gas Springs meet the requirements of the Pressure Equipment Directive 97/23/EC.

The Pressure Equipment Directive (97/23/EC) has been ratified by the European Parliament and the Council of Europe. The requirements of the Pressure Equipment Directive came into force throughout the EC on 29 May 2002.

The directive defines pressure equipment as vessels, pipework, safety devices and pressure accessories. In terms of the Directive a vessel is a casing which is designed and manufactured to contain fluids under pressure.

It follows from this definition that nitrogen Gas Springs of all sizes are deemed to be pressure vessels and must in this respect comply with the Pressure Equipment Directive (97/23/EC) from 29 May 2002.

FML Gas Springs for Mould Making

Maintenance

FIBRO FML Gas Springs are designed for long-term maintenance-free operation. We recommend lightly oiling the piston rod before using. Sealing and guide elements can be replaced easily in very little time.
They are available in a spare parts kit.
Each spare parts kit comes with detailed instructions for maintenance of Gas Springs.

Caution!

Gas Springs may only be charged with commercial Grade 5.0 nitrogen gas.

Accessories

The range of accessories for Gas Springs includes fastening devices, charging and control units, screw connections and lines for setting up compound systems.

Advantages of the FIBRO Mould Line series:

- Very little calibration work required in the tool
- No lubrication required
- No maintenance required for up to 1,000,000 strokes[1]
- Variably adjustable forces
- For mould temperatures of up to 120°C
- Approved as per the European Pressure Equipment Directive 97/23/EC (14th GSGV regulation for pressure vessels)
- Standard safety features (FIBRO Safer Choice)[2]
  Safety piston rod
  Excess pressure protection
  Overstroke protection
- A pressure monitoring system makes it possible to recognise an impending failure at an early point (prevention)
- No tool breakage if the 2nd separation level is locked (the plate comes to a standstill; after the jam is removed, production can be resumed)
- Used worldwide in one million FIBRO Gas Springs
- Cost savings: approximately 60-70% (e.g. compared to a latch-locking unit)

[1] At 80°C to 120°C/ 500,000 strokes
[2] Depending on type of spring

Warning Signs

These are available on request. The signs should be affixed near the springs in as prominent a position as possible.

Size 35x50 mm

Language	Order No
german	2480.00.035.050.1
english	2480.00.035.050.2
french	2480.00.035.050.3
italien	2480.00.035.050.4
spanish	2480.00.035.050.5

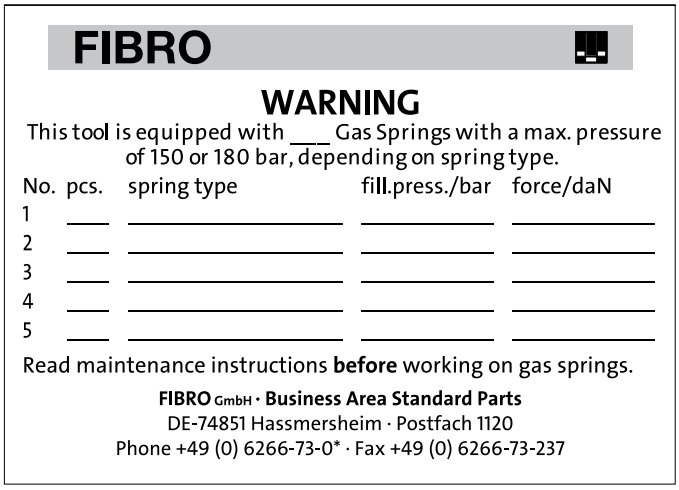

Size 75x105 mm

language	Order No
german	2480.00.075.105.1
english	2480.00.075.105.2
french	2480.00.075.105.3
italian	2480.00.075.105.4
spanish	2480.00.075.105.5

Size110x150 mm

language	Order No
german	2480.00.110.150.1
english	2480.00.110.150.2
french	2480.00.110.150.3
italian	2480.00.110.150.4
spanish	2480.00.110.150.5

Mounting examples

Mounting possibilities for Gas Springs are listed below.
For additional information on mounting, see the corresponding pages in the catalogue.

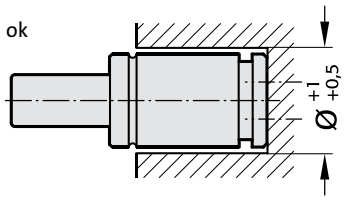

Screw mounted at the base

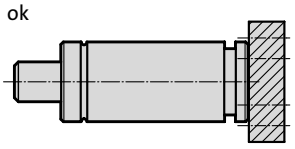

Screw mounted at the base with 2480.011.

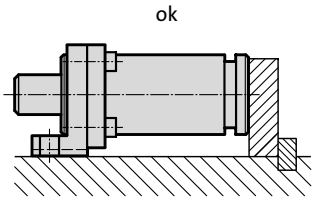

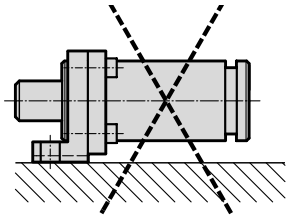

Fastened with 2480.044./045./047.

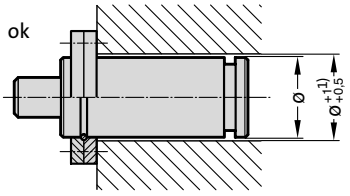

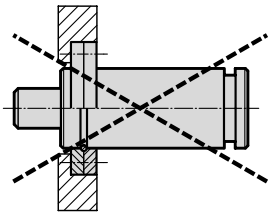

Fastened with 2480.055./057./064.
1) from ø38: $ø^{+2}_{+0,5}$

Installation principle:

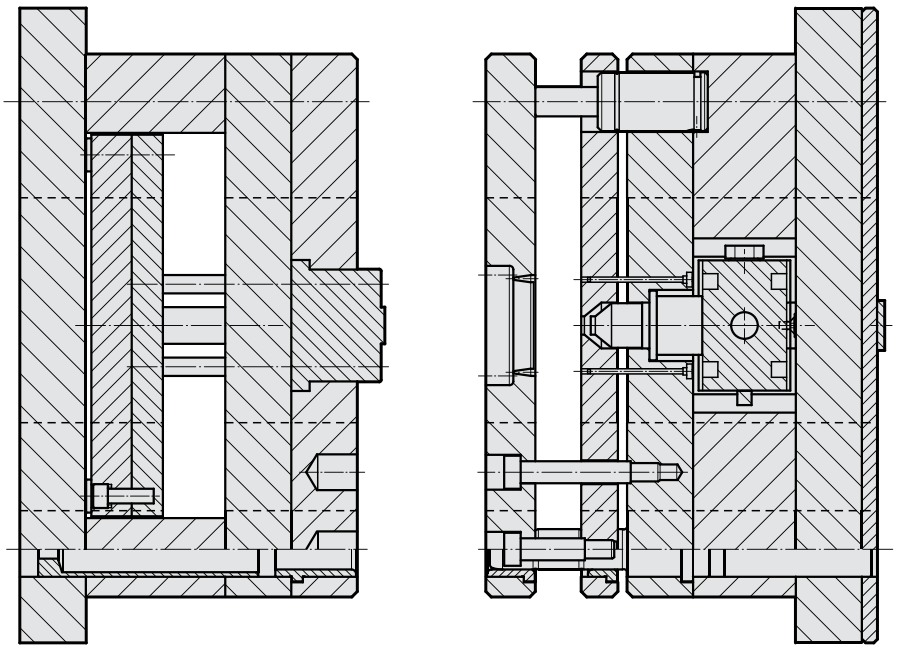

To achieve the best possible service life and safety for the Gas Springs, the installation instructions must be followed.

Mounting instructions

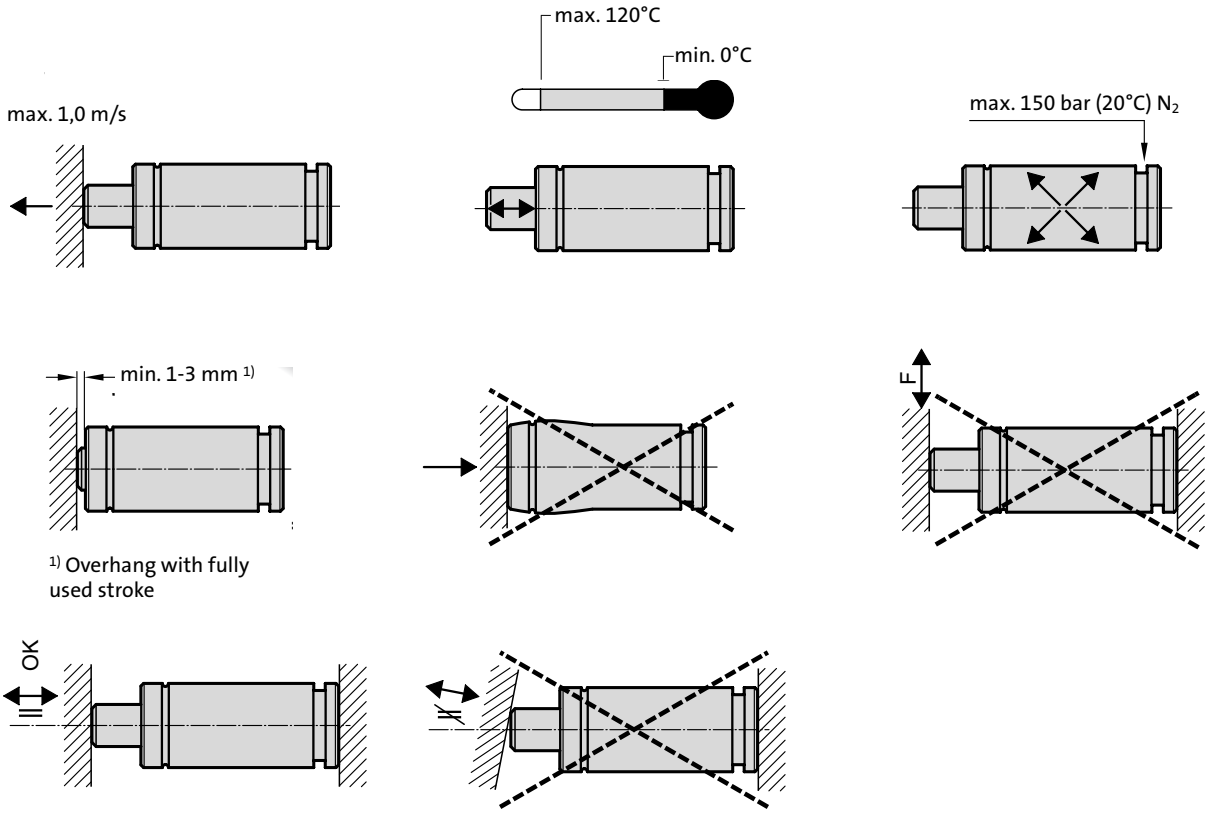

1) Overhang with fully used stroke

- Secure the gas spring in the tool/machine whenever possible using the threaded holes in the base of the spring or clamping elements.
  Do not exceed the maximum tightening torques for the threads in the base of the gas spring:
  (M6 = 10 Nm; M8 = 24 Nm; M10 = 45 Nm; M12 =80 Nm)
- The threaded hole in the piston rod must not be used for fastening gas spring. It must only used for servicing the gas spring.
- Do not use the gas spring in such a way that the piston rod is released abruptly from the position in which it is pressed down (internal damage to the gas spring).
- Install the gas spring parallel to the direction of the compression stroke.
- The contact surface for activating the piston rod must be perpendicular to the direction of the compression stroke and must be sufficiently hardened.
- The gas spring must not be subjected to any forces acting from the side.
- Protect the piston rod against mechanical damage and contact with liquids.
- We recommend leaving an unused stroke reserve of 10% of the nominal stroke length or 5 mm.
- The maximum charging pressure as a function of the working temperature must not be exceeded. If it is, the safety of the system cannot be guaranteed.
- Exceeding the maximum permissible working temperature will reduce the service life of the gas spring significantly.
- The surface of the piston rod/piston should be completely charged.

At FIBRO, safety has always been a top priority.
Below is what we do to help you provide a safer working environment.

FIBRO Safety Features

Excessive Return Speed Protection System

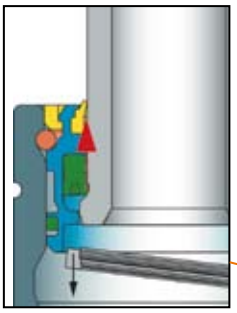

Designed for controlled gas venting through piston rods with integral safety stops and specially designed guides.

Excessive Return Speed

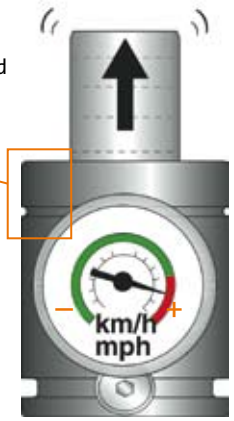

Over-Pressure Protection System

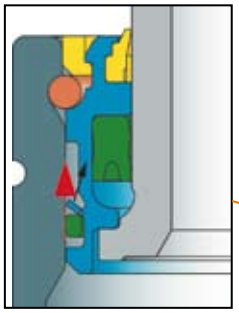

FIBRO Over-Pressure Protection System is designed to vent excessive gas pressure in a controlled manner.

Over-Pressure Condition

Over-Stroke Protection System

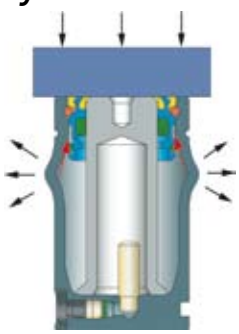

FIBRO has a developed unique System. The cylinder wall is designed to deform in a predefined way, venting the internal gas pressure in a controlled manner.

Over-Stroke Condition

Advice to Gas Spring Buyers

Safety should have always be a top priority. Therefore, we believe Gas Springs for metal forming tools should (unless the maximum allowable pressure PS is less than or equal to 0.5 bar) be ordered with the following **safety requirements**:

1) **Piston rods with an integral safety stop.**
2) **Designed, produced and tested according to Pressure Equipment Directive, PED 97/23/EC for a minimum of 2'000'000 full cycles*:**
   - **at highest allowed charging pressure**
   - **at highest allowed running temperature**
   - **for all specified mounting methods****

   ****including top mount, Type C Flange Mounts, according to ISO 11901-2**

Please Note: Unless the maximum pressure is less than or equal to 0.5 bar, all Gas Springs produced, sold, installed and/or used within the EU should be designed, produced and tested in accordance with PED 97/23/EC.

Pressure Vessel Approval

FIBRO Gas Springs are designed, produced and tested according to PED 97/23/EC for 2'000'000 full cycles* at the highest allowed charging pressure, the highest allowed running temperature, and for all specified mounting methods.

*unless other value stated on the springs

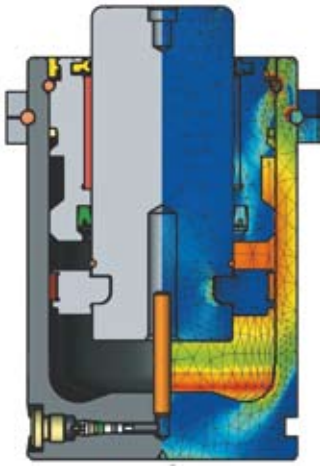

Please note!!! – The safety features mentioned here have not been realized for all FIBRO Gas Springs to date. By consulting the respective data sheets, please make certain you have the accurate safety standard of the gas spring available that you are interested in; otherwise, direct your inquiry to FIBRO GmbH.

Gas Springs (spring-loaded plungers)
Mould Line
with hexagon socket

FIBRO

3479.030.

3479.030.

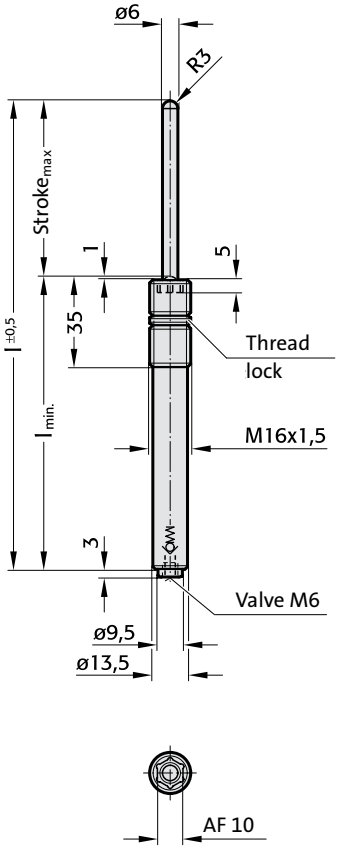

[2] Hexagon nut order supplementary: 2480.004.00040.1 (M16 x 1.5)

3479.030.

The initial spring force at 150 bar/20°C is 42 daN

Order no.	Stroke max.	$l_{min.}$	l
3479.030.00040.010	10	55	65
020	20	65	85
030	30	75	105
040	40	85	125
050	50	95	145
060	60	105	165
070	70	115	185
080	80	125	205

Longer stroke lengths on request

Description:

Spring-loaded plungers are used as ejectors, vibration damping bolts, position holding devices and ejector pins in various areas of engineering involving tools, devices, moulds and machines.
Assembly is performed with a FIBRO insertion tool (2470.12.010.017.)

Note:

Do not repair worn springs; they have to be replaced completely

Pressure medium:	Nitrogen – N_2
max. filling pressure:	see table
min. filling pressure:	25 bar (20°C)
Working temperature:	0 °C to +120 °C
temperature-dependent force increase:	±0.3%/°C

Recommended max. strokes/min.	Working temperature range	Max. filling pressure at 20°C in bar
20	at 0°C- 80°C	150
15	at 80°C-100°C	125
10	at 100°C-120°C	115

Max. piston speed: 1.0 m/s

2470.12.010.017

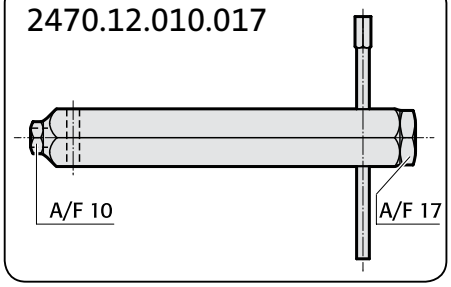

Mounting variations:

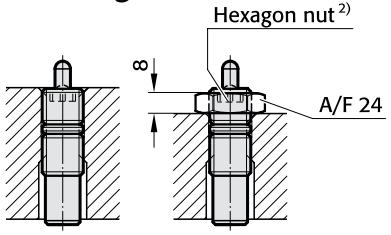

3479.030.

Initial spring force versus charge pressure and working temperature

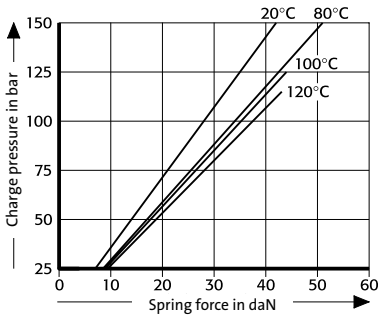

3479.030.

Spring force Diagram displacement versus stroke rise

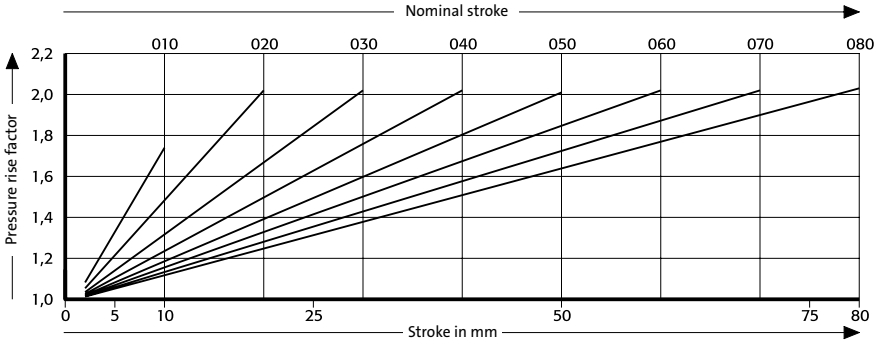

Pressure rise factor accounts for displacement but not external influences!

subject to alterations

FIBRO

3479.032.

Gas Springs (spring-loaded plungers) Mould Line with hexagon socket

APPROVED PED 97/23/EC

3479.032.

The initial spring force at 150 bar/20°C is 170 daN

Order no.	Stroke max.	$l_{min.}$	l
3479.032.00170.010	10	55	65
020	20	65	85
030	30	75	105
040	40	85	125
050	50	95	145
060	60	105	165
070	70	115	185
080	80	125	205

Longer stroke lengths on request

2470.12.010.017

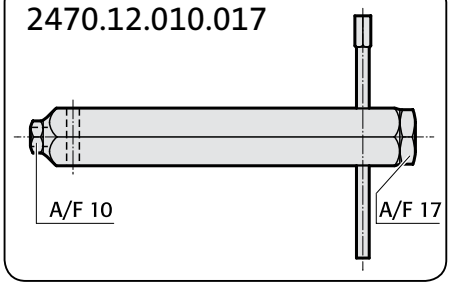

Mounting variations:

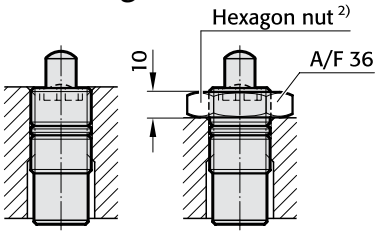

3479.032.

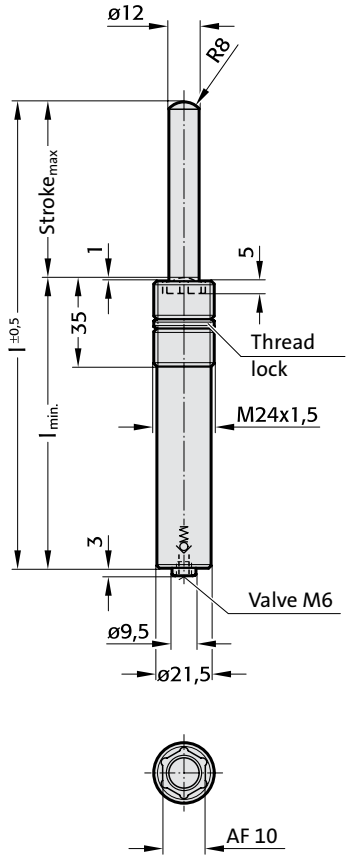

2) Hexagon nut order supplementary: 2480.004.00170

Description:

Spring-loaded plungers are used as ejectors, vibration damping bolts, position holding devices and ejector pins in various areas of engineering involving tools, devices, moulds and machines.
Assembly is performed with a FIBRO insertion tool (2470.12.010.017.)

Note:

Do not repair worn springs; they have to be replaced completely

Pressure medium:	Nitrogen – N_2
max. filling pressure:	see table
min. filling pressure:	25 bar (20°C)
Working temperature:	0°C to +120°C
temperature-dependent force increase:	±0.3%/°C

Recommended max. strokes/min.	Working temperature range	Max. filling pressure at 20°C in bar
20	at 0°C- 80°C	150
15	at 80°C-100°C	125
10	at 100°C-120°C	115
Max. piston speed: 1.0 m/s		

3479.032.

Initial spring force versus charge pressure and working temperature

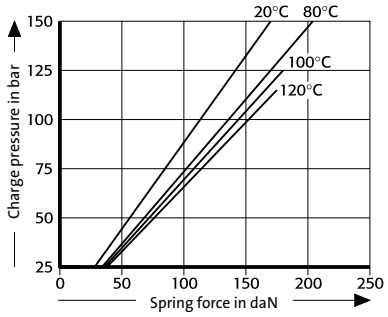

3479.032.

Spring force Diagram displacement versus stroke rise

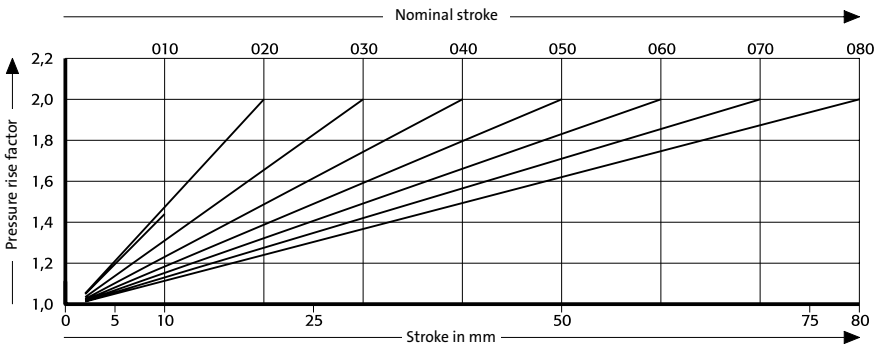

Pressure rise factor accounts for displacement but not external influences!

2480.055.00150

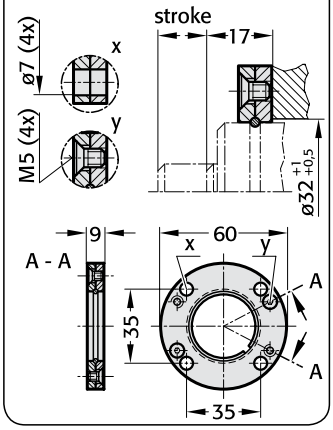

2480.057.00150

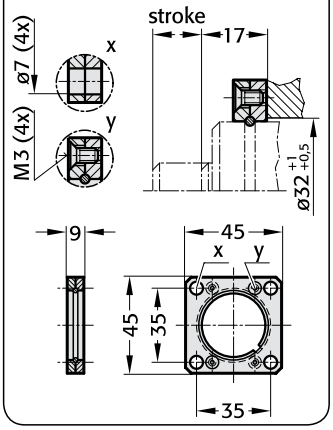

2480.044.00150 [2)]

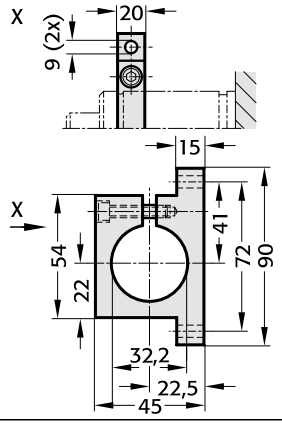

Note:

[2)] Caution:
Spring force must be absorbed by stop surface!

Mounting examples:

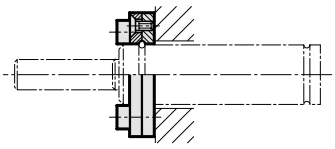

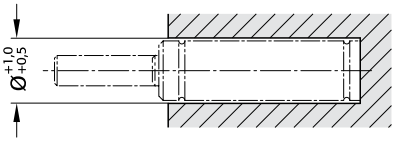

FIBRO

3487.12.00300.

Gas Springs
Mould Line

APPROVED PED 97/23/EC

3487.12.00300.

The initial spring force at 150 bar/20°C is 300 daN

Order no.	Stroke max.	$l_{min.}$	l
3487.12.00300.010	10	40	50
013	13	43	56
016	16	46	62
019	19	49	68
025	25	55	80
032	32	62	94
038	38	68	106
050	50	80	130
063	63	93	156
075	75	105	180
080	80	110	190
100*	100	130	230
125*	125	155	280

*On request

3487.12.00300.

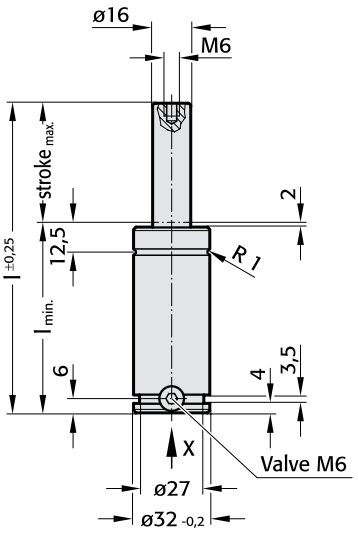

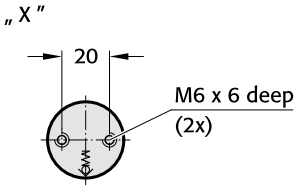

Note:

Order No. for spare parts kit:
3487.12.00300

Pressure medium:	Nitrogen – N_2
max. filling pressure:	see table
min. filling pressure:	25 bar (20°C)
Working temperature:	0 °C to +120 °C
temperature-dependent force increase:	±0.3%/°C

Recommended max. Strokes/min.	working temperature range	Max. filling pressure at 20°C in bar
20	at 0°C- 80°C	150
15	at 80°C-100°C	125
10	at 100°C-120°C	115
Max. piston speed: 1.0 m/s		

3487.12.00300.

Initial spring force versus charge pressure and working temperature

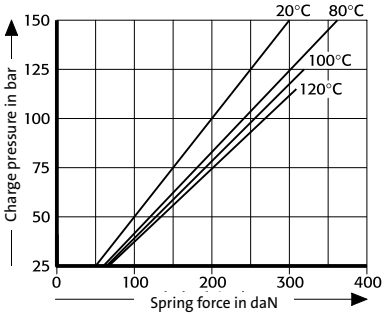

3487.12.00300.

Spring force Diagram displacement versus stroke rise

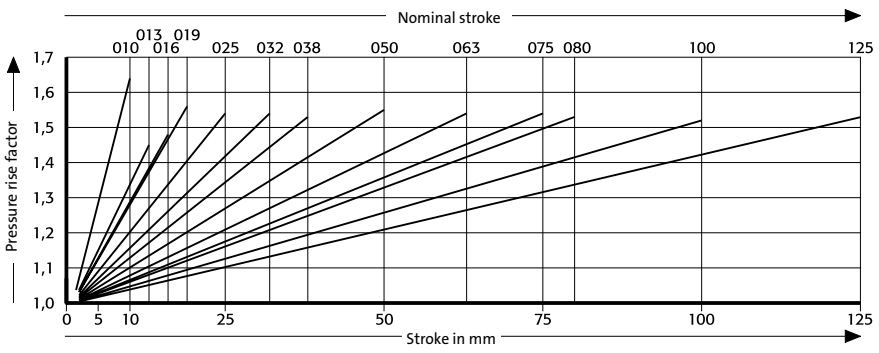

Pressure rise factor accounts for displacement but not external influences!

2480.055.00250

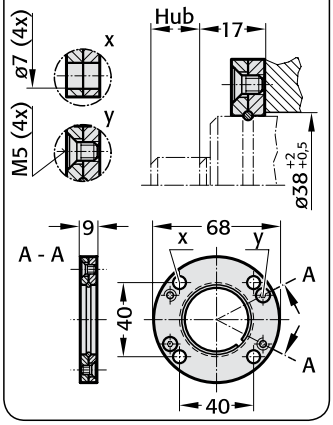

2480.057.00250

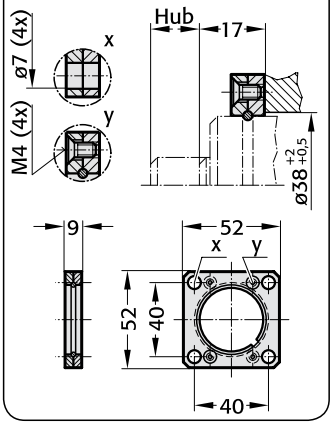

2480.044.00250 [2)]

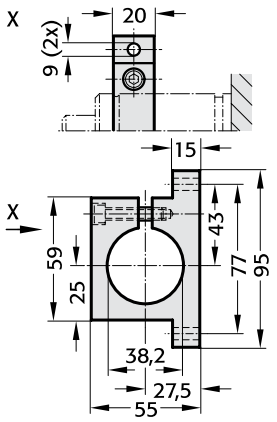

Note:

[2)] Caution:
Spring force must be absorbed by stop surface!

FIBRO

3487.12.00500.

Gas Springs
Mould Line

APPROVED PED 97/23/EC

3487.12.00500.

The initial spring force at 150 bar/20°C is 500 daN

Order no.	Stroke max.	$l_{min.}$	l
3487.12.00500.010	10	40	50
013	13	43	56
016	16	46	62
019	19	49	68
025	25	55	80
032	32	62	94
038	38	68	106
050	50	80	130
063	63	93	156
075	75	105	180
080	80	110	190
100*	100	130	230
125*	125	155	280

*On request

3487.12.00500.

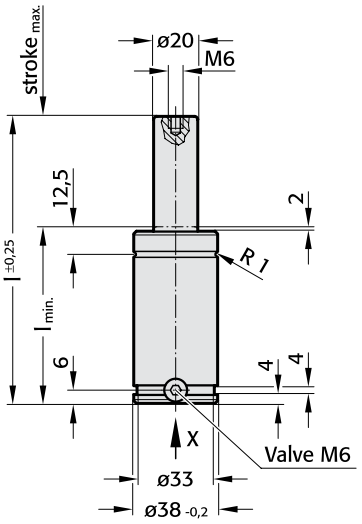

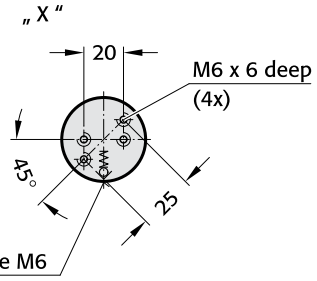

Note:

Order No. for spare parts kit:
3487.12.00500

Pressure medium:	Nitrogen – N_2
max. filling pressure:	see table
min. filling pressure:	25 bar (20°C)
Working temperature:	0 °C to +120 °C
temperature-dependent force increase:	±0.3%/°C

Recommended max. Strokes/min.	working temperature range	Max. filling pressure at 20°C in bar
20	at 0°C- 80°C	150
15	at 80°C-100°C	125
10	at 100°C-120°C	115
Max. piston speed: 1.0 m/s		

3487.12.00500.

Initial spring force versus charge pressure and working temperature

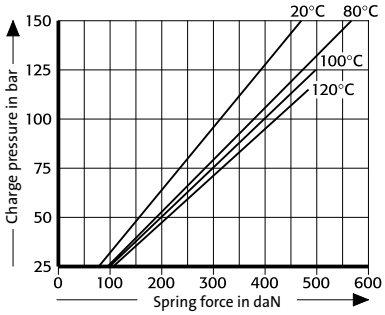

3487.12.00500.

Spring force Diagram displacement versus stroke rise

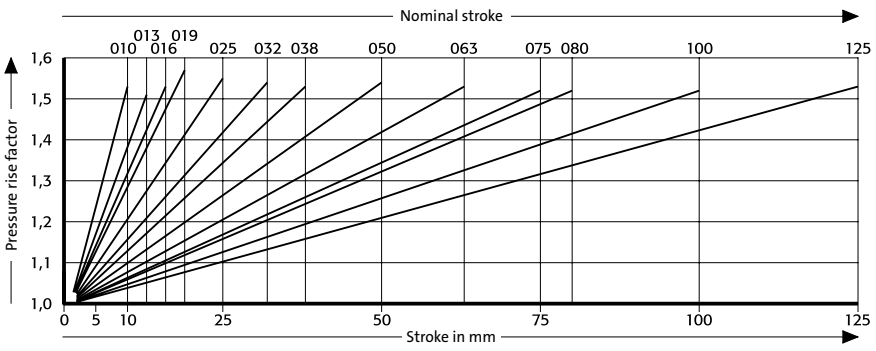

Pressure rise factor accounts for displacement but not external influences!

2480.011.00500

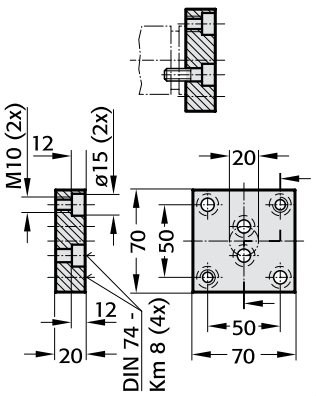

2480.011.00500.1

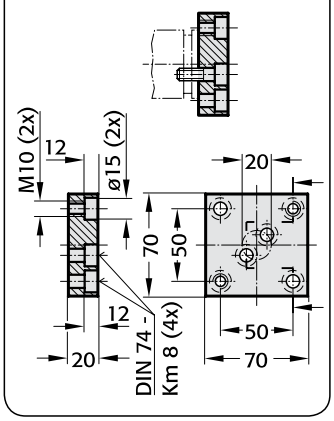

2480.011.00500.2

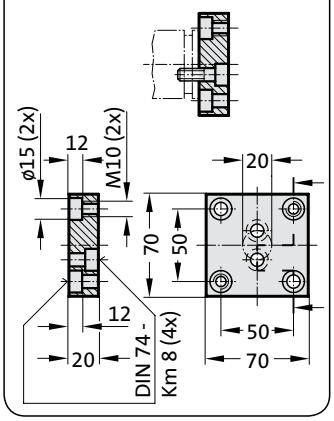

2480.055.00500

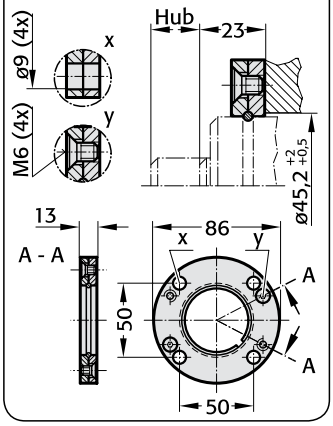

2480.057.00500

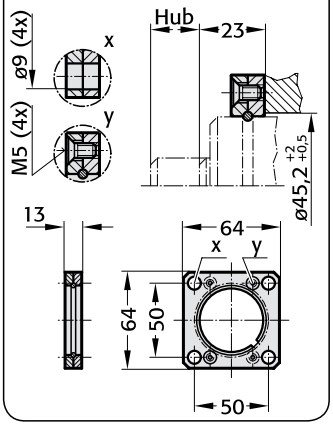

2480.044.00500 [2)]

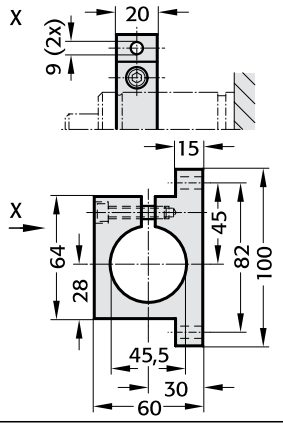

Note:

[2)] Caution:
Spring force must be absorbed by stop surface!

FIBRO

3487.12.00750.

Gas Springs
Mould Line

APPROVED PED 97/23/EC

3487.12.00750.

The initial spring force at 150 bar/20°C is 750 daN

Order no.	Stroke max.	$l_{min.}$	l
3487.12.00750.010	10	42	52
013	13	45	58
016	16	48	62
019	19	51	70
025	25	57	82
032	32	64	96
038	38	70	108
050	50	82	132
063	63	95	158
075	75	107	182
080	80	112	192
100*	100	132	232
125*	125	157	282

*On request

3487.12.00750.

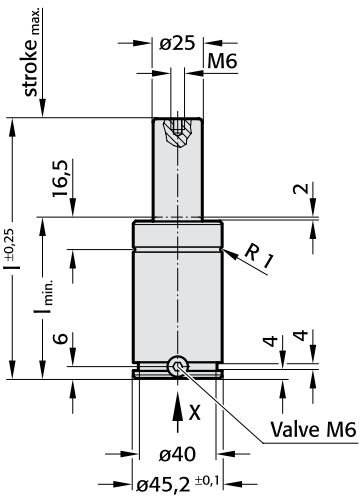

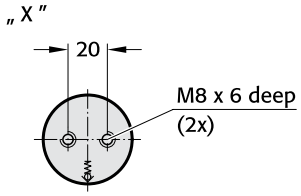

Note:

Order No. for spare parts kit:
3487.12.00750

Pressure medium:	Nitrogen – N_2
max. filling pressure:	see table
min. filling pressure:	25 bar (20°C)
Working temperature:	0 °C to +120 °C
temperature-dependent force increase:	±0.3%/°C

Recommended max. Strokes/min.	working temperature range	Max. filling pressure at 20°C in bar
20	at 0°C- 80°C	150
15	at 80°C-100°C	125
10	at 100°C-120°C	115

Max. piston speed: 1.0 m/s

3487.12.00750.

Initial spring force versus charge pressure and working temperature

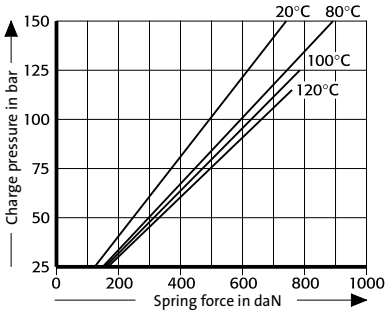

3487.12.00750.

Spring force Diagram displacement versus stroke rise

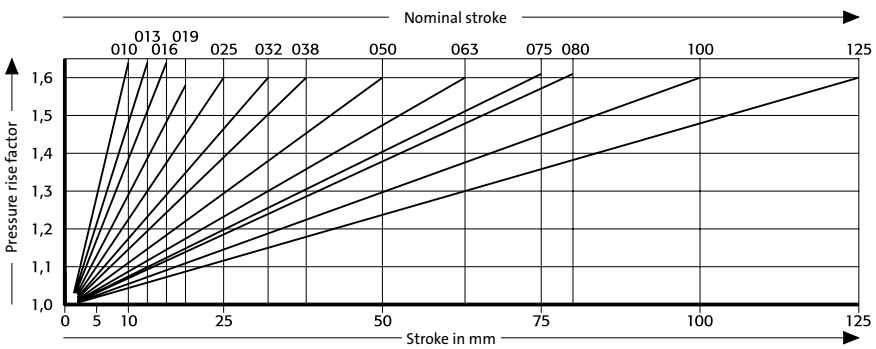

Pressure rise factor accounts for displacement but not external influences!

2480.011.00750

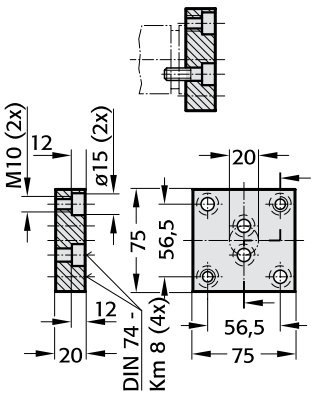

2480.011.00750.1

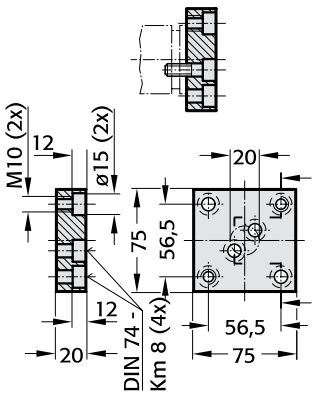

2480.011.00750.3

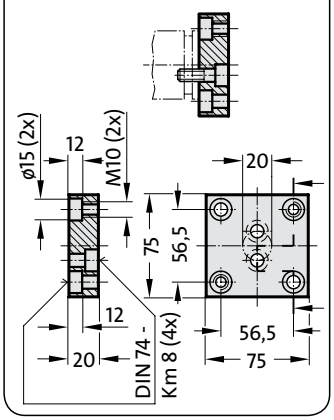

2480.055.00750

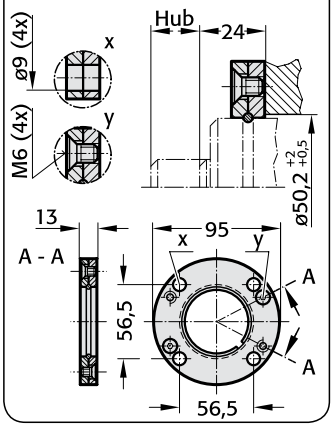

2480.057.00750

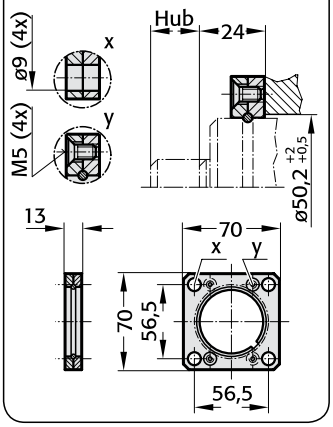

2480.064.00750 4)

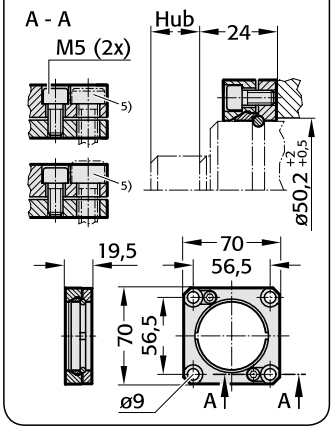

2480.044.00750 2)

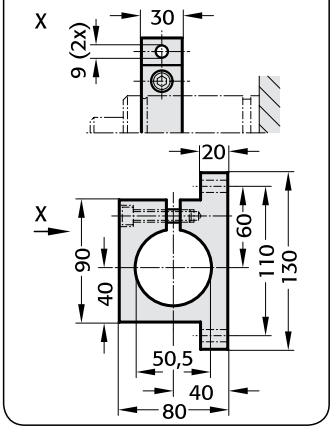

2480.045.00750 2)

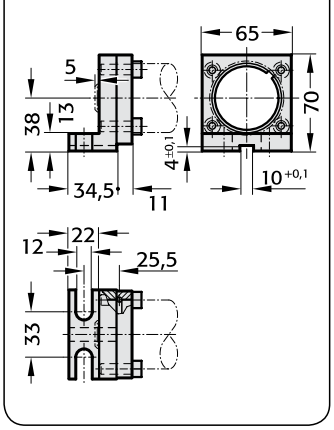

2480.047.00750 2)

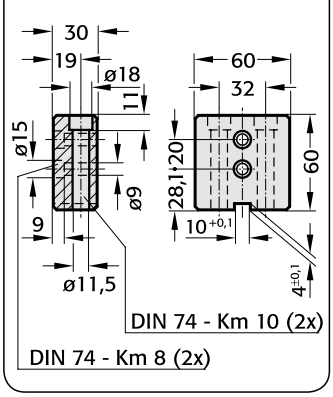

Note:

2) Caution:
Spring force must be absorbed by stop surface!

4) Square collar flange, anti-twist, fixing forcollar connection.

5) Socket head screws withinternal hex (recommended: with low head).

FIBRO

3487.12.01000.

Gas Springs
Mould Line

APPROVED PED 97/23/EC

3487.12.01000.

The initial spring force at 150 bar/20°C is 1000 daN

Order no.	Stroke max.	$l_{min.}$	l
3487.12.01000.013	13	51	64
016	16	54	70
019	19	57	76
025	25	63	88
032	32	70	102
038	38	76	114
050	50	88	138
063	63	101	164
075	75	113	188
080	80	118	198
100*	100	138	238
125*	125	163	288

*On request

3487.12.01000.

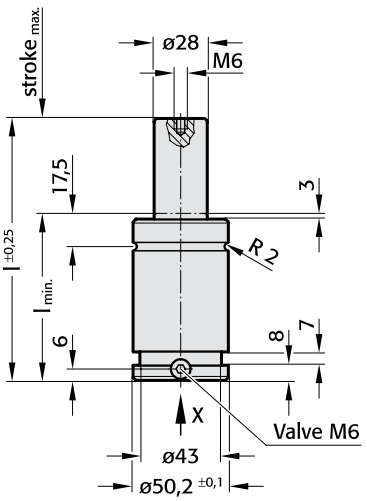

Note:

Order No. for spare parts kit:
3487.12.01000

Pressure medium:	Nitrogen – N_2
max. filling pressure:	see table
min. filling pressure:	25 bar (20°C)
Working temperature:	0 °C to +120 °C
temperature-dependent force increase:	±0.3%/°C

Recommended max. Strokes/min.	working temperature range	Max. filling pressure at 20°C in bar
20	at 0°C- 80°C	150
15	at 80°C-100°C	125
10	at 100°C-120°C	115
Max. piston speed: 1.0 m/s		

3487.12.01000.

Initial spring force versus charge pressure and working temperature

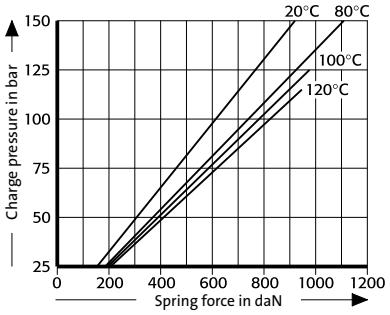

3487.12.01000.

Spring force Diagram displacement versus stroke rise

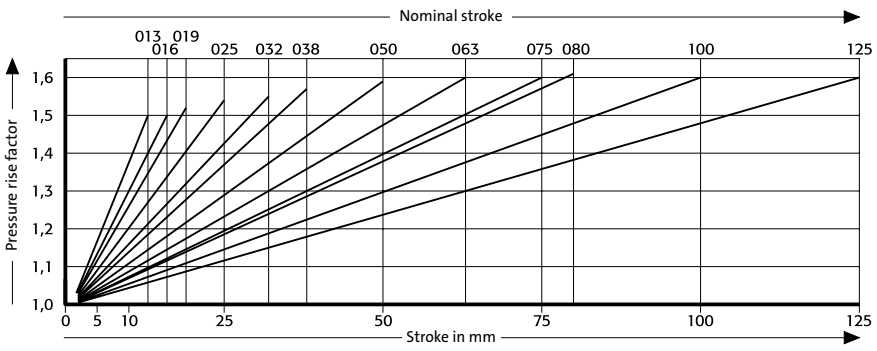

Pressure rise factor accounts for displacement but not external influences!

Gas Spring Accessories see Registry F: Gas Spring Accessories

Auxiliary Equipment see Registry H: Chemical Tooling Aids and Registry J: Peripheral Equipment