A Die Sets

B Precision Ground Plates and Flat Bars

C Lifting and Clamping Devices

D Guide Elements

E Ground Precision Components

Punches and Matrixes,
Pins, Ejector Pins, Gauge Pins

F Springs

G Elastomer-Bars, -Sheets, -Sections

H FIBRO Chemical Tooling Aids

J Peripheral Equipment

K Slide Units

L Standard Parts for Mould Making

Ground Precision Components

Ground Precision Components

FIBRO Precision Components cover a very wide range of materials, shapes and sizes and thus permit virtually unrestricted selection even to highly individual requirements.

At Hassmersheim and also abroad, stock levels of Precision Components reach seven-digit figures. It is therefore quite likely that your particular choice will be available for immediate delivery. Should this not be the case then our flexible batch production schedules will ensure that delays are kept to a minimum.

Batch production in our interpretation not only spells prompt delivery but also exceptional quality. Starting with the arrival inspection of raw materials, every single manufacturing operation on FIBRO Precision Components is followed by a quality check. Lastly, an uncompromising final inspection of each and every part guarantees that the trade mark FIBRO is and remains synonymous with Quality.

In view of the fact that a large portion of the Precision Components programme consists of punches and matrices, the importance of alignment in the operational die must be emphasized. Unless this requirement can be met to a high degree of accuracy, even the finest efforts in design and in the toolroom must fail! Die alignment ultimately depends on the guides – FIBRO Die Sets and Guide Elements were developed and are made with this postulate in mind.

Tool life, production cost and work quality are to a large extent a function of tooling material selection versus strip stock characteristics and ancillary process conditions. A judicious choice from the wide range of materials for our punches and matrices will be facilitated by the orientation guide in this catalogue. Listing the principal characteristics of each material together with selection criteria, it is intended to help customers make the right choice.

Our experienced tooling specialists will assist you with further detailed information.

In keeping with the basic tenet of our firm, every effort is made to ensure that design, performance potential and quality of FIBRO Precision Components keep well abreast with latest technological developments.

Contents

Contents

Contents

Contents

Contents

Comparative Graphs

Compressive Strength (0,2% Proof Stress)

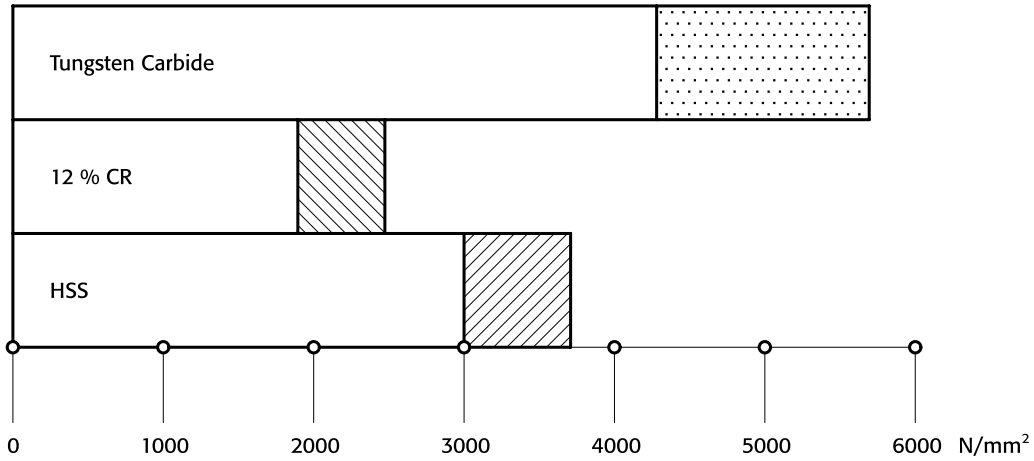

Flexural Strength

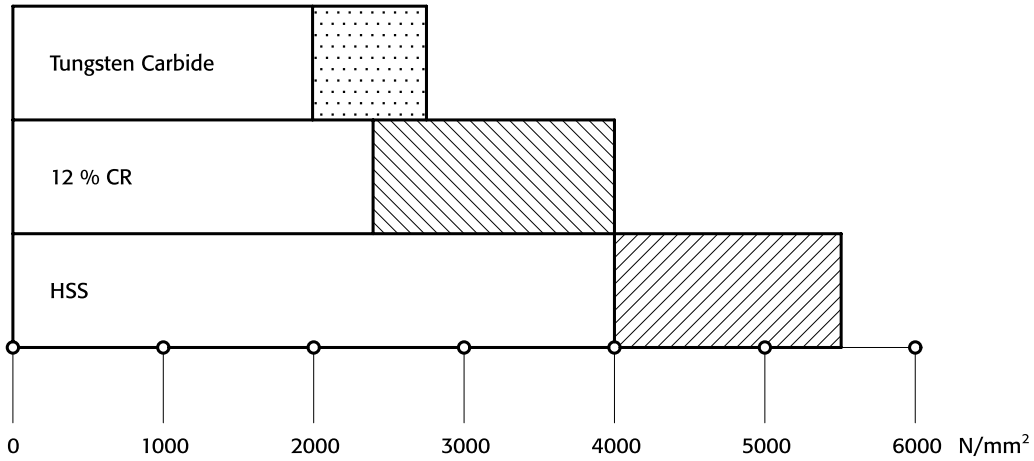

HV 30 - Hardness

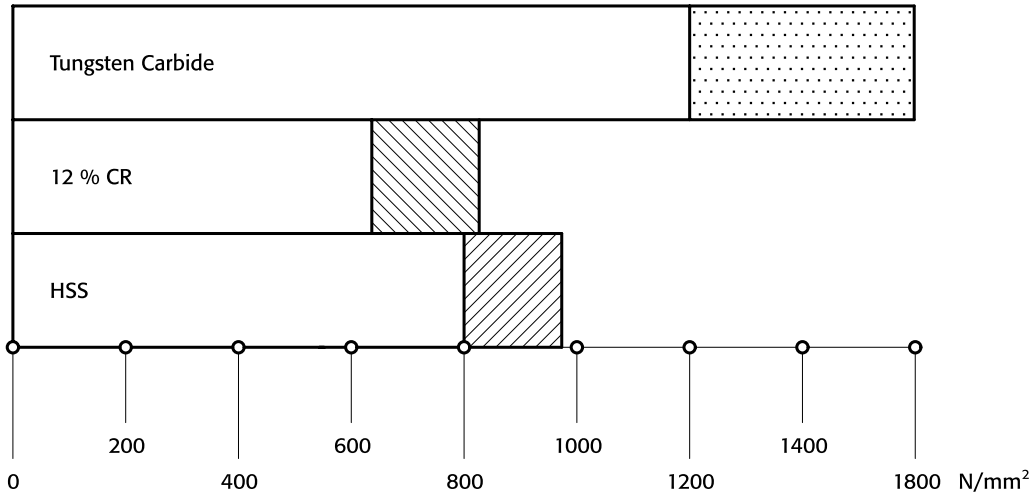

FIBRO Punches and Matrixes – Description of Materials

WS = Alloy Tool Steel

Material No 1.2210, 1.2516, 1.2842 or similar.

Characteristics: Hard and tough tool steel, medium wear resistance.

Application Field: Piercing/blanking dies for mild steel, low carbon steels, non-ferrous metals, plastics, paper.

	WS	= **material code number = "1"**
e.g.	Order No	= 239.**1**. ...

HWS = High Carbon – High Chrome Tool Steel (12% Cr)

Material No 1.2436, 1.2379 or similar.

Characteristics: High resistance to wear.

Application Field: Piercing/blanking dies of all types, trim dies, for all carbon steels, alloy steels, non-ferrous metals, plastics, paper.

	HWS	= **material code number = "2"**
e.g.	Order No	= 260.**2**. ...

HSS = High Speed Steel

Material No 1.3343 or similar.

Characteristics: High wear resistance; high tempering curve permits certain surface treatments.

Application Field: Piercing/blanking dies of all types – for tough materials e.g. spring steel, lamination steels, and abrasive papers as well as plastics.

	HSS	= **material code number = "3"**
e.g.	Order No	= 220.**3**. ...

ASP 23
ASP 2023 = High Speed Steel on Powder-Metallurgic Basis

Characteristics: High wear resistance – greater toughness due to excellent homogenity.

Application Field: Same as HSS.

	ASP 23 **ASP 2023**	= **material code number = "6"**
e.g.	Order No	= 223.**6**. ...

HST = High Speed Steel, Nitrided

Characteristics: High wear resistance – reduced galling tendency on account of nitrides infused into top layer of material.

Application Field: Piercing/blanking dies of all types – for very hard and abrasive materials.

	HST	= **material code number = "4"**
e.g.	Order No	= 223.**4**. ...

FT = Ferro-Tic (Ferro Titanit)

Characteristics: Between those of HSS and hard metals (tungsten carbides); machinable in the supplied state – hardness conferred by heat treatment.

Application Field: Fine blanking and progression/lamination dies for large quantities of parts from abrasive, hard materials, also silicon steels and stainless steels.

FT	**special manufacture** **– on request –**

HZ = Hard-coated Tooling Components for High-Performance

HZC Composite Vapour Deposition (CVD) **TIC-TIN** Coating

Carrier Materials: HSS Material No 1.3207 and 1.3343 etc.

HCHC Material No 1.2379 and 1.2436 etc.

Properties: The titanium carbide substrate provides a pressure-resistant bond with the carrier metal, while the outer layer of titanium nitride offers the well-known advantages of optimum tribologic behaviour in contact with the stamping stock. By virtue of its outstanding wear resistance, the TIN-layer largely eliminates seizing and cold welding problems in stamping.
Surface Hardness: approx. 3500 HV 0,05
Coating Thickness: 5 to 8 µm approx.

Applications: All tooling components subject to high demands on wear resistance and performance, especially punches in progression/combination tools, as well as cold extrusion punches etc.
Owing to distorsion problems, TIC-TIN is not recommanded for parts with a length/thickness ratio than 20:1.

	TIC-TIN	= **material code number = "5"**
e. g.	Order No	= 223.**5**. ...

HZN Titanium Nitride Coating **TIN**-PVD (physical vapour deposition).

Carrier Material: HSS Material No 1.3207 and 1.3343 etc.
HCHC Material No 1.2379
(HCHC-steels are of conditional suitability)

Properties: The TIN-coating offers excellent frictional characteristics but its compressive strength remains inferior to TIC-TIN deposits. The TIN-deposition process can be applied to partial, selected areas of the tooling component.
Surface Hardness: approx. 2300 HV 0,05
Coating Thickness: 2–4 µm < Ø 20 = 1,5 µm ± 20 %

Applications: Tooling for thin stamping stock such as cold rolled spring steel, zinc-galvanized sheet and strip, copper-beryllium bronze, german silver, and solenoid lamination steels.
Note that the ratio stock thickness to punch point diameter should not exceed 1:3.

	TIN	= **material code number = "0"**
e. g.	Order No	= 223.**0**. ...

HM = Tungsten Carbide

Characteristics: Hard-sintered carbide on WC-basis and of recognized properties; produced by powder-metallurgic processes, FIBRO's exclusively used HIP-densified carbide exhibits much enhanced flexural strength and reduced residual porosity.

Application Field: Die components for highest performance and very large stamping volumes – for altogether ultimate demands on tool life.

	HM	= **material code number = "9"**
e. g.	Order No	= 270.**9**. ...

NWA = Hot-Work Tool Steel – Suitable for Nitriding

Material No 1.2344 or similar.

Characteristics: Chrome-Molybdenum-Vanadium hot working die steel; core strength: > 1400 N/mm²; temperature resistant up to 650°C; surface hardness (nitrided) ≧ 950 HV 0,3.

Application Field: Ejector pins for pressure diecasting, injection- and compression moulding processes, and generally for work at elevated temperatures.

	NWA	= **material code number = "8"**
e. g.	Order No	= 237.**8**. ...

Precision Punches DIN 9861
Shape DA

222.

222.

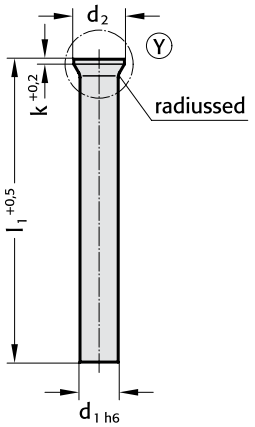

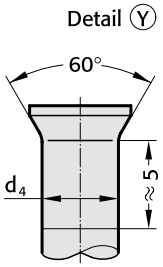

Material:

Type DA – Execution:
Shank precision ground.
Head hot upset-forged and tempered. Residual upset bulge below head normally much smaller than permissible acc. to DIN 9861.

Note:

Punches are also available without head

Ordering Code (example):

Punch	=	222.
Material HSS	=	3.
d_1 = ∅ 6,30 mm	=	0630.
l_1 = 71 mm	=	071
Order No	=	222.3.0630.071

Material:

HZ – TIN (HSS)

Order No:		222.0.
Hardness:	Surface	2300 HV 0,05
	Head	52±3 HRC

HSS

Order No:		222.3.
Hardness:	Shank	64±2 HRC
	Head	52±3 HRC

HST

Order No:		222.4.
Hardness:	Surface	≧ 950 HV 0,3
	Head	52±3 HRC

Description of FIBRO materials for die components: pages E 10–E 11.

222. diameter steps

d_1	d_1	d_2	d_4	k	l_1
0,50	0,05	0,9	$d_1^{+0,02}$	0,2	stock lenghts: 71, 80, 100 mm. other lengths and diameters on request!
0,55		1,0			
0,60		1,1			
0,65		1,2			
0,70 + 0,75		1,3			
0,80 + 0,85		1,4		0,4	
0,90 + 0,95		1,6			
1,0 + 1,1	0,1	1,8	$d_1^{+0,03}$	0,5	
1,2 + 1,3		2,0			
1,4 + 1,5		2,2			
1,6 + 1,7		2,5			
1,8 + 1,9		2,8			
2,0		3,0			
2,1 + 2,2		3,2			
2,3 – 2,5		3,5			
2,6 – 2,9		4,0			
3,0 – 3,4		4,5			
3,5 – 3,9		5,0			
4,0 – 4,4		5,5			

222. diameter steps

d_1	d_1	d_2	d_4	k	l_1
4,5 – 4,9	0,1	6,0	$d_1^{+0,03}$	0,5	stock lenghts: 71, 80, 100 mm. other lengths and diameters on request!
5,0 – 5,4		6,5			
5,5 – 5,9		7,0			
6,0 – 6,4		8,0			
6,5 + 7,0	0,5	9,0		1,0	
7,5 + 8,0		10,0			
8,5 + 9,0		11,0			
9,5 + 10,0		12,0			
10,5 + 11,0		13,0			
11,5 + 12,0		14,0			
12,5 + 13,0		15,0			
13,5 + 14,0		16,0		1,5	
14,5 + 15,0		17,0			
15,5 + 16,0		18,0			

223.

Precision Punches DIN 9861 Shape D/ISO 6752

223.

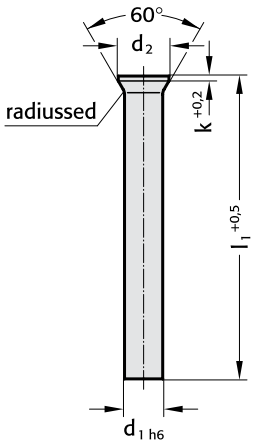

Material:

HSS
Order No: 223.3.
Hardness: Shank 64±2 HRC
Head 52±3 HRC

HST
Order No: 223.4.
Hardness: Surface ≧950 HV 0,3
Head 52±3 HRC

HZ – TIN (HSS)
Order No: 223.0.
Hardness: Surface 2300 HV 0,05
Head 52±3 HRC

ASP 23 – ASP 2023
Order No: 223.6.
Hardness: Shank 64±2 HRC
Head 52±3 HRC

Description of FIBRO materials for die components:
pages E 10 – E 11.

Type D – Execution:

Head hot upset-forged and tempered.
Shank and head subsequently precision plunge-ground for perfect concentricity and full interchangeability with replacement punches.

Ordering Code (example):

Punch	=	223.
Material HSS	=	3.
d_1 = ∅ 16,5 mm	=	1650.
l_1 = 80 mm	=	080
Order No	=	223.3.1650.080

223.

d_1	diameter steps d_1	d_2	k	l_1
0,50	0,05	0,9	0,2	stock lenghts: 71, 80, 100 mm. other lengths and diameters on request!
0,55		1,0		
0,60		1,1		
0,65		1,2		
0,70 +0,75		1,3		
0,80 +0,85		1,4	0,4	
0,90 +0,95		1,6		
1,0 +1,1	0,1	1,8	0,5	
1,2 +1,3		2,0		
1,4 +1,5		2,2		
1,6 +1,7		2,5		
1,8 +1,9		2,8		
2,0		3,0		
2,1 +2,2		3,2		
2,3 –2,5		3,5		
2,6 –2,9		4,0		
3,0 –3,4		4,5		
3,5 –3,9		5,0		
4,0 –4,4		5,5		
4,5 –4,9	0,1	6,0		
5,0 –5,4		6,5		
5,5 –5,9		7,0		

223.

d_1 h6	diameter steps d_1	d_2	k	l_1
6,0 – 6,4	0,1	8,0	0,5	stock lenghts: 71, 80, 100 mm. other lengths and diameters on request!
6,5 + 7,0	0,5	9,0	1,0	
7,5 + 8,0		10,0		
8,5 + 9,0		11,0		
9,5 +10,0		12,0		
10,5 +11,0		13,0		
11,5 +12,0		14,0		
12,5 +13,0		15,0		
13,5 +14,0		16,0	1,5	
14,5 +15,0		17,0		
15,5 +16,0		18,0		
16,5 +17,0		19,0		
17,5 +18,0		20,0		
18,5 +19,0		21,0		
19,5 +20,0		22,0		

Precision Punches DIN 9861 Shape CA+C

224.
225.

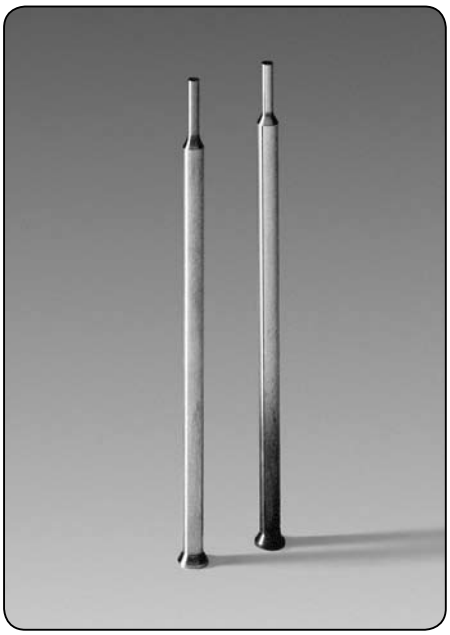

224. ShapeCA

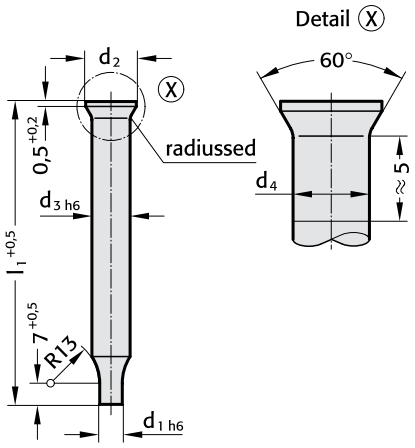

225. Shape C

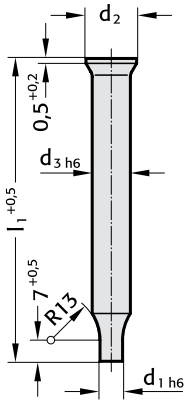

Executions:

Shape CA

Shank precision ground, head subsequently hot upset-forged and tempered; residual upset-buge below head normally much smaller than permissible acc. to DIN 9861.

Shape C

Head hot upset-forged and tempered.
Shank and head subsequently precision plunge-gorund for perfect concentricity and full interchangeability with replacement punches.

Ordering Code (example):

Punch C	=	225.
Material HSS	=	3.
d_1 = ∅ 2,30 mm	=	0230.
l_1 = 71 mm	=	071
Order No	=	225.3.0230.071

Material:

HZ – TIN (HSS)

Order No:		Form CA = 224.0.
		Form C = 225.0.
Hardness:	Surface	2300 HV 0,05
	Head	52±3 HRC

HSS

Order No:		Form CA = 224.3.
		Form C = 225.3.
Hardness:	Shank	64±2 HRC
	Head	52±3 HRC

HST

Order No:		Form C = 225.4.
Hardness:	Surface	≧950 HV 0,3
	Head	52±3 HRC

ASP 23 – ASP 2023

Order No:		Form C = 225.6.
Hardness:	Shank	64±2 HRC
	Head	52±3 HRC

Description of FIBRO materials for die components: pages E 10 – E 11.

224.

diameter steps					
d_1	d_1	d_2	d_3	d_4	l_1
0,1–0,45	0,05	3	2	d_3 +0,03	stock lengths: 71 mm. other lengths and diameters on request.
0,50					
0,55					
0,60					
0,65					
0,70 + 0,75					
0,80 + 0,85					
0,90 + 0,95					
1,00 – 1,10					
1,15 – 1,30					
1,35 – 1,50					
1,55 – 1,70		4,5	3		
1,75 – 1,90					
1,95 – 2,00					
2,05 – 2,20					
2,25 – 2,50					
2,55 – 2,95					

225.

diameter steps				
d_1	d_1	d_2	d_3	l_1
0,1–0,45	0,05	3	2	stock lengths: 71 mm. other lengths and diameters on request.
0,50				
0,55				
0,60				
0,65				
0,70 + 0,75				
0,80 + 0,85				
0,90 + 0,95				
1,00 – 1,10				
1,15 – 1,30				
1,35 – 1,50				
1,55 – 1,70		4,5	3	
1,75 – 1,90				
1,95 – 2,00				
2,05 – 2,20				
2,25 – 2,50				
2,55 – 2,95				

FIBRO

274.
275.

Precision Punches
Similar to DIN 9861
Shape CA+C

274. Shape CA

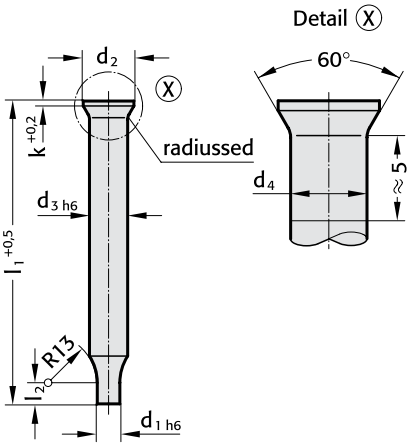

275. Shape C

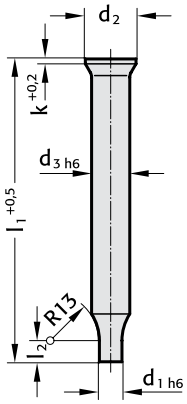

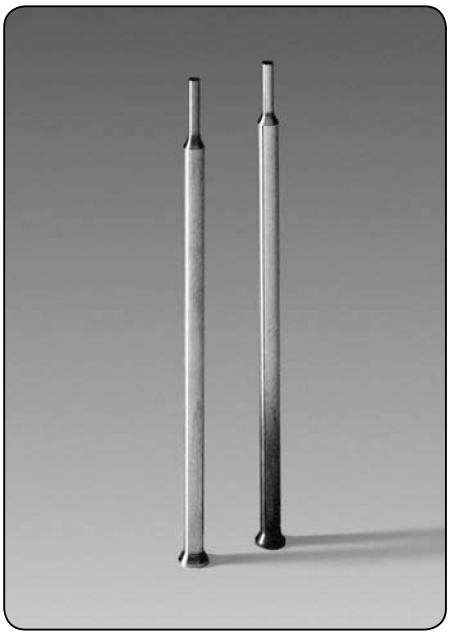

Material:

HZ – TIN (HSS)

Order No:		Form CA = 274.0.
		Form C = 275.0.
Hardness:	Surface	2300 HV 0,05
	Head	52±3 HRC

HSS

Order No:		Form CA = 274.3.
		Form C = 275.3.
Hardness:	Shank	64±2 HRC
	Head	52±3 HRC

HST

Order No:		Form CA = 274.4.
		Form C = 275.4.
Hardness:	Surface	≧950 HV 0,3
	Head	52±3 HRC

ASP 23 – ASP 2023

Order No:		Form C = 275.6.
Hardness:	Shank	64±2 HRC
	Head	52±3 HRC

Description of FIBRO materials for die components:
pages E 10–E 11.

Execution:

Shape CA

Shank precision ground, head subsequently hot upset-forged and tempered; residual upset-bulge below head normally much smaller than permissible acc. to DIN 9861.

Shape C

head hot upset-forged and tempered.
Shank and head subsequently precision plunge-ground for perfect concentricity and full interchangeability with replacement punches.

Description of Special Series 274. and 275.

DIN 9861 restricts the range of stepped punches with conical head to shanks of 3 mm max. diameter and points of 2,95 mm max. diameter.

Stepped punches of larger size are, however, quite popular owing to their rigidity and ability to sustain considerable stripping forces.

In accommodation of this demand we supply larger sizes which are ground from stock sizes of the 222.-and 223.-series

Please select from those ranges and complete your order in accordance with the example on the right.

Ordering Code (example):

Punch CA	= 274.
Material HSS	= 3.
d_3 = ∅ 8,0 mm	= 0800.
l_1 = 71 mm	= 071.
d_1 = ∅ 6,4 mm	= 0640.
l_2 = 10 mm	= 010
Order No	= 274.3.0800.071.0640.010

Stepped Quill Punches – Conical Head
Head Type Quill Bush and Thrust Pin
Ball Lock Type Quill Bush and Thrust Pin VDI 3374

FIBRO

232. 233. 234.

232.

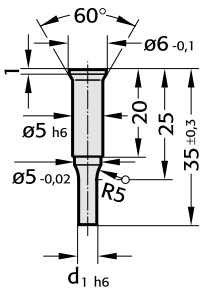

VDI 3374

233. Shape A

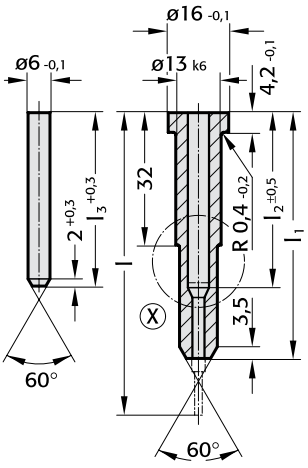

VDI 3374

234. Shape B

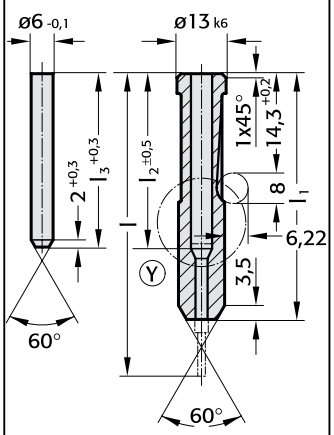

VDI 3374

233.

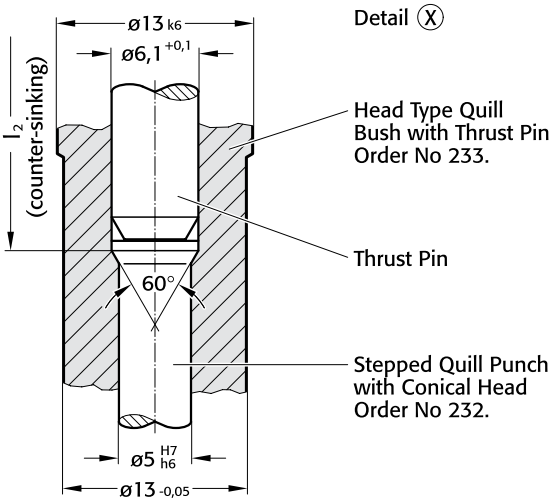

234.

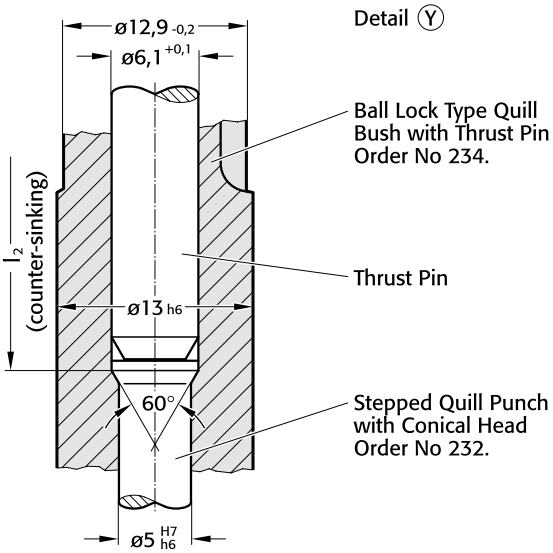

Execution:

Heads of Quill Punches hot upset-forged; shank and head subsequently precision plunge-ground.
O. D. of Quill Bushes precision ground.
Thrust Pins are hardened, tempered and ground.

Material:

Stepped Quill Punches – Conical Head VDI 3374:
HSS

Order No:		232.3.
Hardness:	Shank	62±2 HRC
	Head	45±5 HRC

Quill Bushes O. No. 233. and 234. – VDI:

Steel C 45	heat treated to 800 N/mm2
Order No:	Shape A = 233.7., Shape B = 234.7.

Thrust Pin:
HWS
Hardness: 62±2 HRC

Description of FIBRO materials for die components:
pages E 10– E 11.

232./233./234.

d_1	diameter steps d_1	l	l_1	l_2	l_3
from 2,0 bis 5,0	0,1	63	48	29	29
		71	57	37	37
		80	65	46	46

Ordering Code (example):

Stepped Quill Punch/Conical Head	=	232.
Material HSS	=	3.
d_1 = ∅ 2,2 mm	=	0220
Order No	=	232.3.0220

Ordering Code (example):

Head Shape Quill bush + Thrust Pin	=	233.
Material C 45	=	7.
l_1 = 48 mm	=	048
Order No	=	233.7.048

FIBRO

2281.
2291.

Round Precision Punches with tapered heads 30°, Shape C+D

2281. Shape D

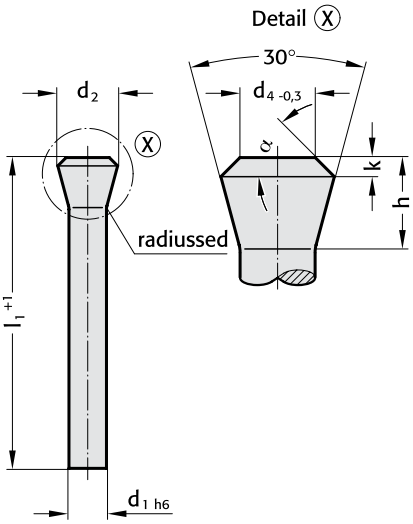

2291. Shape C

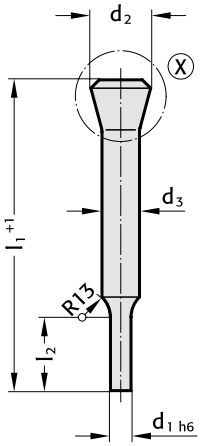

Material:

HSS
Order No.: Shape D = 2281.3.
Shape C = 2291.3.
Hardness: Shank 58 + 2 HRC
Head ≤ 50 HRC

Description of FIBRO materials for die components:
pages E 10 – E 11.

Execution:

Shape C and D
Head hot upset-forged and tempered.
Shank and head subsequently precision plunge-ground for perfect concentricity and full interchangeability with replacement punches.

2281. Shape D

d_1	d_2	d_4	h	k	α ±1°	l_1 100	l_1 120
5,5	8,98	5,5	7,5	1	30	●	●
6	9,75	6	8		28	●	●
8	12,8	8	10		22,5	●	●
9	14,4	9	11		20	●	●
10	15,9	10	12		19	●	●
12	18,7	12	14	1,5	24		●
14	21,8	14	16		21		●
16	24,6	16	18	2	25		●

Ordering Code (example):

Punch	=	2281.
Material HSS	=	3.
d_1 = 6 mm	=	0600.
l_1 = 100 mm	=	100
Order No	=	2281.3.0600.100

2291. Shape C

d_3	d_2	d_4	h	k	α ±1°	l_1 100	l_1 120
5,5	8,98	5,5	7,5	1	30	●	●
6	9,75	6	8		28	●	●
8	12,8	8	10		22,5	●	●
9	14,4	9	11		20	●	●
10	15,9	10	12		19	●	●
12	18,7	12	14	1,5	24		●
14	21,8	14	16		21		●
16	24,6	16	18	2	25		●

d_1 and l_2 to customer's specifications!

Ordering Code (example):

Punch	=	2291.
Material HSS	=	3.
d_3 = 10 mm	=	1000.
l_1 = 120 mm	=	120.
d_1 = 6 mm	=	0600.
l_2 = 15 mm	=	015
Order No	=	2291.3.1000.120.0600.015

Punch with tapered head, Shape D
Piloted counterbore for tapered-head punch

2284.3.
2284.00.

2284.3.

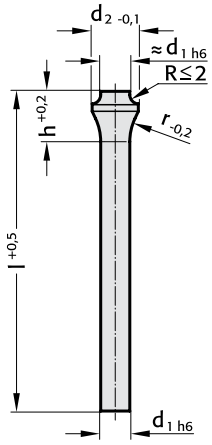

2284.3. Shape D

Material:		HSS
Order Code:		2284.3.
Hardness	Shaft	62 - 66 HRC
	Head	45 - 55 HRC

Execution:

Punch shaft fine ground.
Punch head warm upset-forged and tempered.

Ordering Code (example):

Punch with tapered head	= 2284.
Material HSS	= 3.
d_1 = 20 mm	= 2000.
l = 100 mm	= 100
Order Code	= 2284.3.2000.100

2284.00.

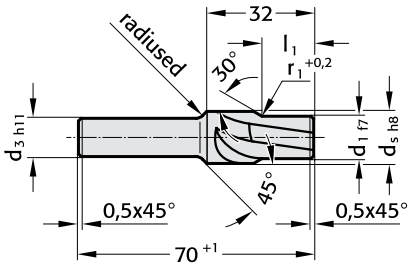

2284.00.

Material: HSS
Hardness: 62 - 66 HRC

Execution:

hardened, tempered and ground

For description of material and other materials see pages E10 - E11.

Ordering Code (example):

Piloted counterbore for tapered-head punch	= 2284.00.
d_1 = 12.5 mm	= 1250
Order Code	= 2284.00.1250

FIBRO

2284.3. Punch with tapered head, Shape D
2284.00. Piloted counterbore for tapered-head punch

2284.3.								2284.00.			
d_1	d_2	h	r	l				d_5	d_3	r_1	l_1
				71	80	100	110				
2.0	3	4.80	3.5	●	●	●		3.3	3.3	3.5	5.0
2.1	3.2	5.28	5	●	●	●		3.5	3.5	5.0	5.0
2.2	3.2	5.18	5	●	●	●		3.5	3.5	5.0	5.0
2.3	3.5	5.37	5	●	●	●		3.8	3.8	5.0	5.0
2.4	3.5	5.28	5	●	●	●		3.8	3.8	5.0	5.0
2.5	3.5	5.18	5	●	●	●		3.8	3.8	5.0	5.0
2.6	4	5.93	6.5	●	●	●		4.3	4.3	6.5	7.0
2.7	4	5.83	6.5	●	●	●		4.3	4.3	6.5	7.0
2.8	4	5.73	6.5	●	●	●		4.3	4.3	6.5	7.0
2.9	4	5.62	6.5	●	●	●		4.3	4.3	6.5	7.0
3.0	4.5	6.03	6.5	●	●	●		4.9	4.9	6.5	7.0
3.1	4.5	5.93	6.5	●	●	●		4.9	4.9	6.5	7.0
3.2	4.5	5.83	6.5	●	●	●		4.9	4.9	6.5	7.0
3.3	4.5	5.73	6.5	●	●	●		4.9	4.9	6.5	7.0
3.4	4.5	5.62	6.5	●	●	●		4.9	4.9	6.5	7.0
3.5	5	6.38	8	●	●	●		5.4	5.4	8.0	7.0
3.6	5	6.27	8	●	●	●		5.4	5.4	8.0	7.0
3.7	5	6.16	8	●	●	●		5.4	5.4	8.0	7.0
3.8	5	6.04	8	●	●	●		5.4	5.4	8.0	7.0
4.0	5.5	7.38	8	●	●	●		5.9	5.9	8.0	8.0
4.1	5.5	7.27	8	●	●	●		5.9	5.9	8.0	8.0
4.2	5.5	7.16	8	●	●	●		5.9	5.9	8.0	8.0
4.3	5.5	7.04	8	●	●	●		5.9	5.9	8.0	8.0
4.4	5.5	6.92	8	●	●	●		5.9	5.9	8.0	8.0
4.5	6	7.38	8	●	●	●		6.4	6.4	8.0	8.0
4.6	6	7.27	8	●	●	●		6.4	6.4	8.0	8.0
4.7	6	7.16	8	●	●	●		6.4	6.4	8.0	8.0
4.8	6	7.04	8	●	●	●		6.4	6.4	8.0	8.0
4.9	6	6.92	8	●	●	●		6.4	6.4	8.0	8.0
5.0	7	8.36	10	●	●	●		7.4	7.4	10.0	10.0
5.1	7	8.25	10	●		●		7.4	7.4	10.0	10.0
5.2	7	8.15	10		●	●		7.4	7.4	10.0	10.0
5.5	8	8.84	10	●	●	●		8.5	8.5	10.0	10.0
5.6	8	8.75	10			●		8.5	8.5	10.0	10.0
6.0	9	9.27	10	●	●	●		9.5	9.5	10.0	10.0
6.1	9	9.19	10			●		9.5	9.5	10.0	10.0
6.2	9	9.10	10			●		9.5	9.5	10.0	10.0
6.3	9	9.02	10	●		●		9.5	9.5	10.0	10.0
6.4	9	8.93	10	●		●		9.5	9.5	10.0	10.0
6.5	10	10.24	12	●		●	●	10.5	10.5	12.0	12.0
7.0	10	9.81	12	●	●	●		10.5	10.5	12.0	12.0
7.5	11	10.24	12	●	●	●		11.5	11.5	12.0	12.0
7.7	11	10.07	12			●		11.5	11.5	12.0	12.0
8.0	11	9.81	12	●	●	●	●	11.5	11.5	12.0	12.0
8.1	11	9.72	12	●		●		11.5	11.5	12.0	12.0
8.5	13	11.90	15	●	●	●		13.5	13.0	15.0	12.0
9.0	13	11.48	15	●	●	●	●	13.5	13.0	15.0	12.0
9.5	14	11.90	15	●		●		14.5	13.0	15.0	12.0
10.0	14	11.48	15	●	●	●	●	14.5	13.0	15.0	12.0
10.5	15	11.90	15			●		15.5	13.0	15.0	15.0
11.0	15	11.48	15			●		15.5	13.0	15.0	15.0
11.5	16	11.90	15			●		16.5	13.0	15.0	15.0
12.0	16	11.48	15			●	●	16.5	13.0	15.0	15.0
12.5	17	11.90	15			●		17.5	13.0	15.0	15.0
13.0	17	11.48	15	●	●	●	●	17.5	13.0	15.0	15.0
13.5	18	11.90	15			●		18.5	13.0	15.0	15.0
14.0	18	11.48	15			●	●	18.5	13.0	15.0	15.0
14.5	19	11.90	15			●		19.5	13.0	15.0	15.0
15.0	19	11.48	15			●	●	19.5	13.0	15.0	15.0
15.5	20	11.90	15			●		20.5	13.0	15.0	15.0
16.0	20	11.48	15	●	●	●	●	20.5	13.0	15.0	15.0
17.0	21	11.48	15	●		●	●	21.5	16.0	15.0	15.0
18.0	22	11.48	15			●	●	22.5	16.0	15.0	15.0
19.0	23	11.48	15			●		23.5	16.0	15.0	15.0
19.5	25	12.66	15			●		25.5	16.0	15.0	15.0
20.0	25	12.29	15			●		25.5	16.0	15.0	15.0

Assembly Guide Lines for Head Type Punches with Round Points

Description:

Head type punches with round point (DIN 9844) are intended for floating assembly in the punch retainer. Radial guiding is to be provided by the stripper.
This type of punch assembly eliminates alignment errors caused by distorted mounting of the die set and faulty press geometry.
With punches held in this manner, a clear separation between transmission of perforation force and guiding is achieved.
In order to facilitate assembly of punches of different diameters, the height of the heads is standardized to $4_{+0,2}$ mm (DIN 9844).

Guide Lines:

(excerpts from DIN 9844, page 5)

d_1 max. = stock thickness

stripping force*, for d_1 from 1 to 5 mm: approx. 20 % of piercing force
ditto . . ., for d_1 from 5 to 16 mm: approx. 10 % of piercing force

*applicable to stock not exceeding 400 N/mm² shear strength

Punch retainer: steel of at least 300 N/mm² tensile strength

Retaining hole in punch retainer = 1,05 times d_1 or d_2 respectively

Clearance punch head/percussion plate = 0,02 mm.

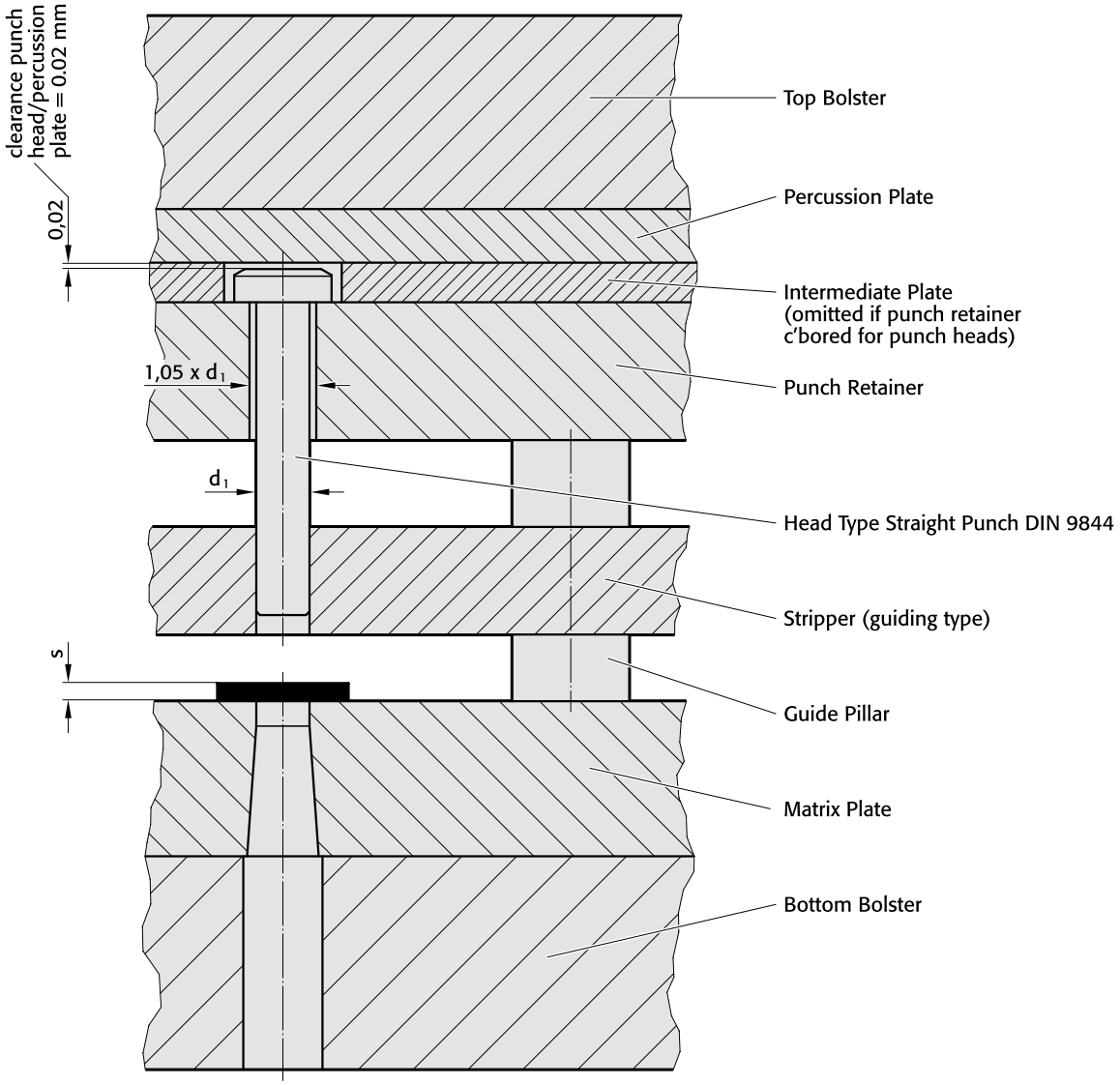

FIBRO

220.
221.

Precision Punches DIN 9844
Shape A+B

220. Shape A 221. Shape B

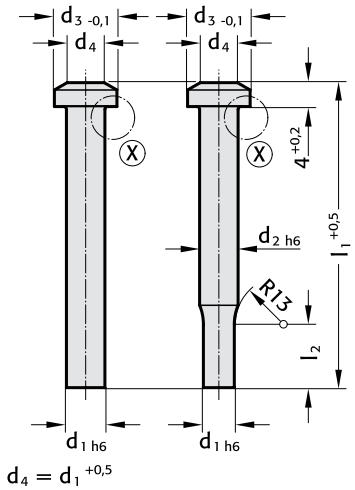

Detail X
normal execution
with radius

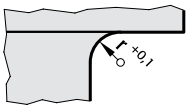

Material:

HSS

Order No:		Shape A = 220.3. Shape B = 221.3.
Hardness	Shank	64±2 HRC
	Head	52±3 HRC

HST

Order No:		Shape A = 220.4. Shape B = 221.4.
Hardness	Surface	≧950 HV 0,3
	Head	52±3 HRC

Description of FIBRO materials for die components:
pages E 10 – E 11.

Execution:

Head hot upset-forged.
Shank and shoulder precision plunge-ground.

Ordering Code (example):

Punch A	= 220.
Punch B	= 221.
Material HSS	= 3.
d_1 = 7,0 mm	= 0700.
l_1 = 71 mm	= 071
Order No	= 220.3.0700.071
Order No	= 221.3.0700.071

220. Shape A

d_1	diameter steps d_1	d_3	r	l_1
2,0 – 2,2	0,1	3,6	0,2	stock lengths: 71, 90, 112 mm; other lengths and diameters on request.
2,3 – 2,5		4,0		
2,6 – 2,8		4,5	0,3	
2,9 – 3,2		5,0		
3,3 – 3,5		6,0		
3,6 – 4,0		7,0		
4,1 – 4,5		8,0	0,5	
4,6 – 5,0		8,5		
5,1 – 5,4		9,0		
5,5 – 5,9		9,5		
6,0 – 6,4		10,0		
6,5 + 7,0	0,5	10,8	0,7	
7,5 + 8,0		12,0		
8,5 + 9,0		13,0		
9,5 +10,0		14,5		
10,5 +11,0		16,0	1,0	
11,5 –12,5		18,0		
13,0 –14,5		20,0		
15,0 –16,0		22,0		

221. Shape B

d_1	diameter steps d_1	d_2	d_3	l_2	r	l_1
0,1 – 0,45	0,05	2,0	3,6	7	0,2	lengths 71, 90, 112 mm available at short notice; other lengths and diameters on request.
0,5 – 1,9						
1,95 – 2,4		2,5	4,0			
2,5 – 3,1	0,1	3,2	5,0		0,3	
3,2 – 3,9		4,0	7,0			
4,0 – 4,9		5,0	8,5		0,5	
5,0 – 6,2		6,3	10,0			
6,3 – 7,9		8,0	12,0	16	0,7	
8,0 – 9,9		10,0	14,5			
10,0 –12,4		12,5	18,0		1,0	
12,5 –15,9		16,0	22,0			

266.

Precision Punches
Similar to VDI 3374

266.

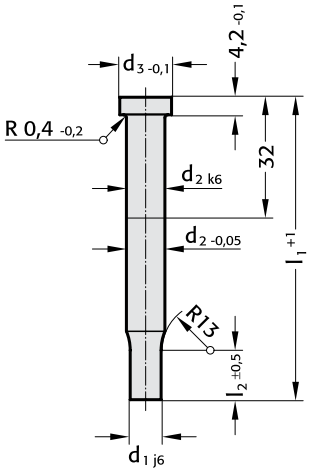

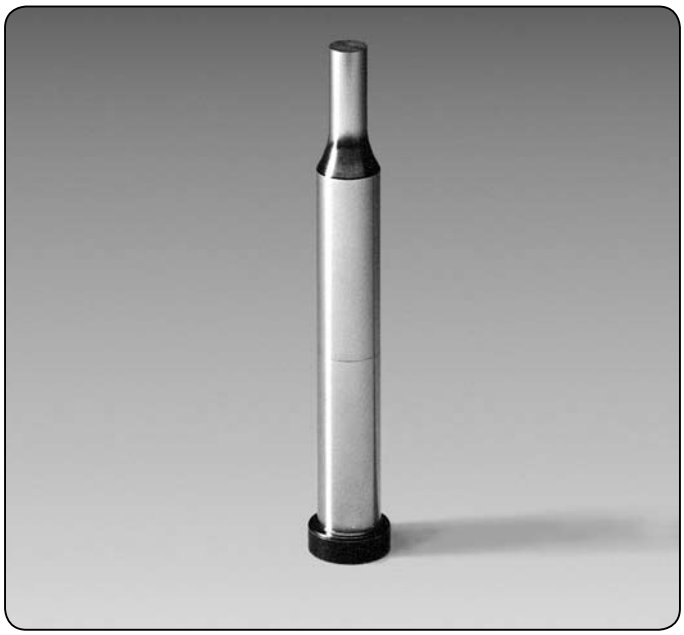

Werkstoff:

HSS

Order No.:		266.3.
Hardness:	Shank	62±2 HRC
	Head	45±5 HRC

Description of FIBRO materials for die components:
pages E 10 and E 11.

Execution:

Head hot upset-forged; shank and head precision plunge-ground.

Ordering Code (example):

Punch	= 266.
Material HSS	= 3.
d_1 = 8,0 mm	= 0800.
l_1 = 71 mm	= 071
Order No	= 266.3.0800.071

266.

diameter steps

d_1	d_1	d_2	d_3	l_2	$l_1{}^{+1}$
5– 8,9	0,1	10	13	13	
9–11,9		13	16		
12–15,9		16	19		
16–19,9	0,5	20	24		
20–24,9		25	29		

available at short notice in lengths:
71 and 80 mm; other lenghts and dia. on request.

Precision Punches with Ejector Pin

267.

267.

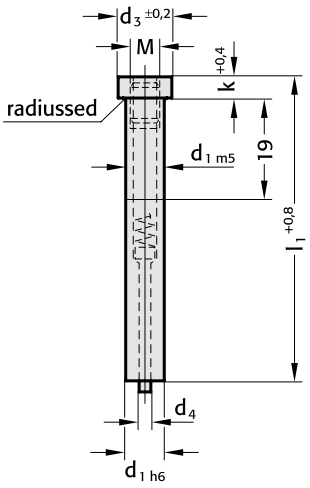

Execution:

Head hot upset-forged.
Shank and shoulder precision plunge-ground.

Ordering Code (example):

Punch	= 267.	
Material HSS	=	3.
d_1 = 8,0 mm	=	0800.
l_1 = 71 mm	=	071
Order No	= 267.3.0800.071	

Material:

HSS

Order No:		267.3.
Hardness:	Shank	64±2 HRC
	Head	52±3 HRC

Description of FIBRO materials for die components:
pages E 10 and E 11.

267.

				l_1				
$d_{1\text{-}h6}$	d_3	d_4	k	60	71	80	90	M
5	8	0,5	5	●	●			M 3
6	9	0,8		●	●	●	●	
8	11	1,3		●	●	●	●	M 4
10	13			●	●	●	●	
13	16	1,6		●	●	●	●	M 5
16	19	2,4	6,4	●	●	●	●	M 6
20	23			●	●	●	●	
25	28	3,2		●	●	●	●	

FIBRO

268. 269. Precision Punches with Ejector Pin, Stepped, Short/Long Point

Classified Point Shapes

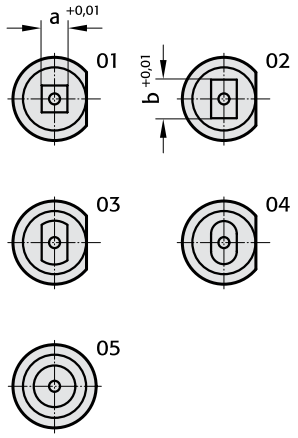

268. 269.

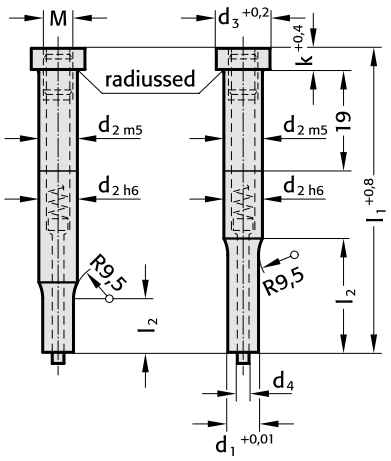

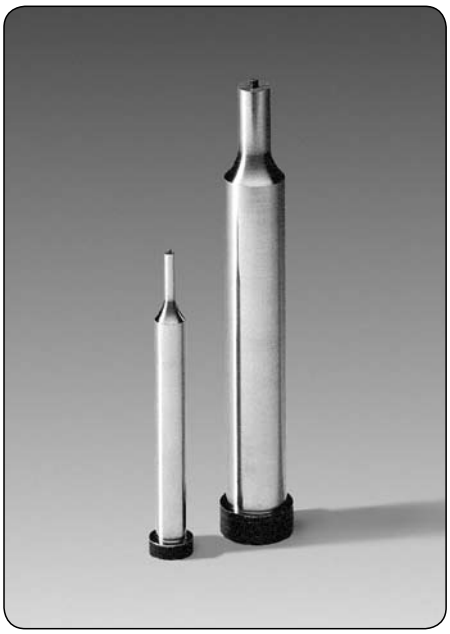

Material:

HSS
Order No: 268.3. (short point)
Hardness: Shank 64±2 HRC
Head 52±3 HRC
HSS
Order No: 269.3. (long point)
Hardness: Shank 64±2 HRC
Head 52±3 HRC

Description of FIBRO materials for die components: pages E 10 and E 11.

Execution:

Head hot upset-forged.
Shank and shoulder precision plunge-ground.

Key flats parallel with longest size of shape, unless otherwise specified.

Ordering Code (example):

Punch	= 268.
Material HSS	= 3.
d_2 = 8,0 mm	= 0800.
l_1 = 71 mm	= 071.
Classified Point Shape 05	= 05.
d_1 = 6,0 mm	= 0600
Order No	= 268.3.0800.071.05.0600

268./269.

d_1	d_2	d_3	d_4	k	l_2 (268.)	l_2 (269.)	l_1 60	l_1 71	l_1 80	l_1 90	a min.	M
1,6 – 4,9	5	8	0,5	5	7	–	●	●			1,6	M 3
2,3 – 5,9	6	9	0,8			17,5	●	●	●	●	2,3	
3,5 – 7,9	8	11	1,3		13	25	●	●	●	●	3,2	M 4
5,0 – 9,9	10	13				28	●	●	●	●	4,8	
6,0 – 12,9	13	16	1,6				●	●	●	●		M 5
8,0 – 15,9	16	19	2,4	6,4			●	●	●	●	5,5	M 6
12,0 – 19,9	20	23					●	●	●	●		
16,0 – 24,9	25	28	3,2				●	●	●	●	6,5	

Sintered Hard Metal HIP-Densified

The HIP Process (hot isostatic pressing) consists of a special densification treatment.

Applied after the sintering stage, this widely used process involves compacting, at very high temperature and pressure, of the carbide structure. It yields an appreciable reduction in porosity, better strength properties and thus longer die life of press tool members.

As can be seen from the diagrams and tables, both compressive and flexural strength are improved.

For stamping die tooling, hard metal types of medium tungsten particle size, with a cobalt content of 9 to 12%, have been found succesful in a wide field of applications.

Tensile Strength of Tungsten – 6% Cobalt Carbide in the Sintered-Only versus HIP-Densified State, in Dependance of Cristallite Particle Size

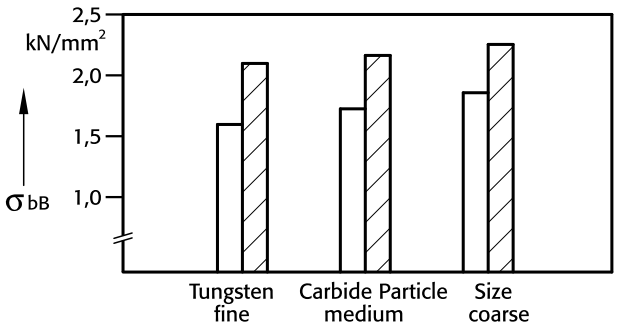

a) influence of crystallite size of hard metal phase
(left: sintered only – right: sintered and HIP-treated)

Tensile Strength of Tungsten – Cobalt Carbide in the Sintered-Only versus HIP-Densified State, in Dependance of total Cobalt Content

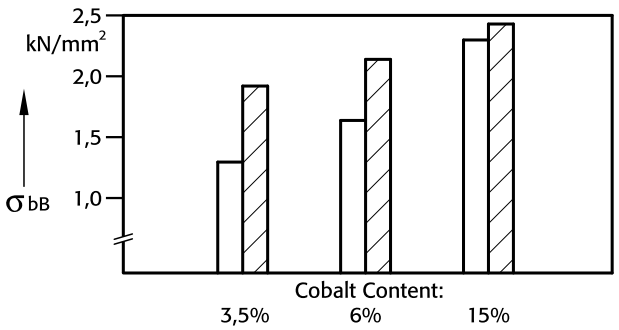

b) influence of cobalt content
(left: sintered only – right: sintered and HIP-treated)

Tungsten carbide-particle size	Co %	HV_{30}-Hardness befor	HV_{30}-Hardness after	Flexural Strength N/mm² befor	Flexural Strength N/mm² after
fine	3	1800	no changes	1200	1700
	6	1650		1500	2300
	9	1400		2000	2600
medium	6	1600		2000	2600
	9	1450		2350	2700
	12	1300		2450	2900
	15	1200		2700	2850
coarse	6	1400		1900	2250
	8	1350		2300	2600
	10	1200		2650	2850

Flexural Strength and HV30-Hardness of Tungsten-Cobalt Carbides with/without HIP-Treatment and in Dependance of Tungsten Carbide Particle Size and Cobalt Content.

FIBRO

270. 272. 271. 273.

Carbide Punches – similar to DIN 9844 + DIN 9861
Cylindrical Head – Straight and Stepped
Conical Head – Straight and Stepped

270. Shape A

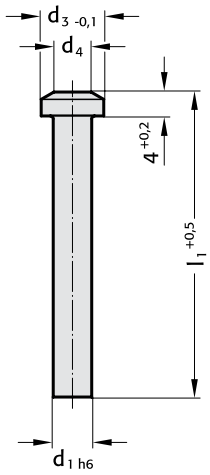

271. Shape B

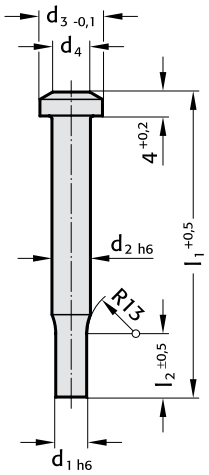

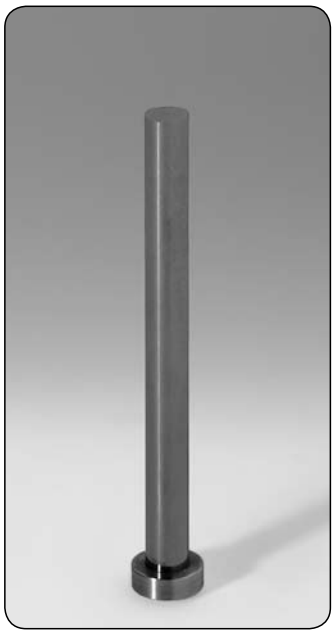

272. Shape D

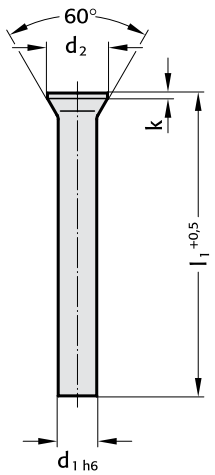

273. Shape C

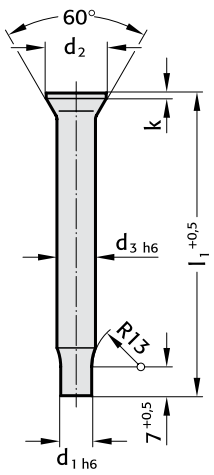

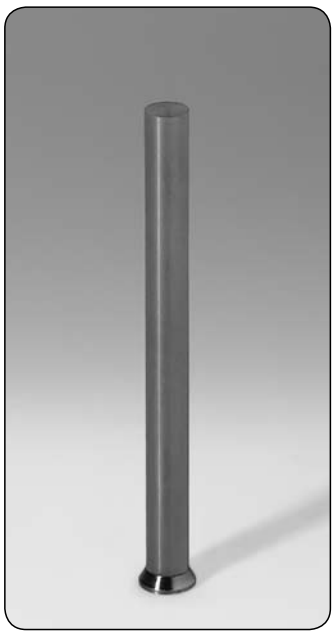

Material:

Tungsten-Cobalt Carbide

Order No: Shape A = 270.9., Shape B = 271.9.
Shape D = 272.9., Shape C = 273.9.

Dimensions:

See DIN 9844 and DIN 9861 on pages E 12, E 13, E 14, E 15 and E 21.

Other diameters and lengths on request.

Delivery:

270.

Shape A from d_1 = 1,0 mm

272.

Shape D from d_1 = 1,5 mm

Execution:

Heads steel, brazed to shanks.
Shanks precision ground.

Ordering Code (example):

Carbide Punch	= 272.
Material: Tungsten-Cobalt Carbide	= 9.
d_1 = 6,0 mm	= 0600.
l_1 = 71 mm	= 071
Order No	= 272.9.0600.071

Ball-Lock Punches

Ordering example
Ball-Lock Punches

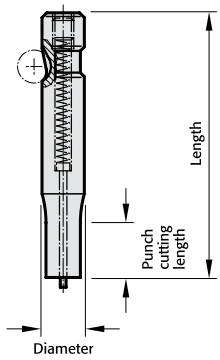

NB: See table for standard dimensions
Special dimensions to order

2 2 4 2 . 2 F 1 . 0 6 5 0 . 0 4 5 0 B

Punch:
22 without ejector pin
27 with ejector pin

Format: Slot length P = 6,5 mm

Format: Slot width W = 4,5 mm

Punch cutting length: l_1	Order No
13	= 1
19	= 2
25	= 3
30	= 4
special	= X

Version:	Order No
blank	= 0
round	= 1
square	= 2
rectangular	= 3
slot	= 4
rectangle with radiused corners	= 5
pilot pin with tapered tip	= 6
pilot pin parabolic tip	= 7
special shapes	= 9

Diameter: d_2	Order No
6 (light duty only)	= 1
10	= 2
13	= 3
16	= 4
20	= 5
25	= 6
32	= 7
38 (light duty only)	= 8
40 (heavy duty only)	= 9

Lenght: l	Order Code character
50	= A
56	= B
63	= C
71	= D
80	= E
90	= F
100	= G
110	= H
125	= J
140	= K
150	= L
175	= M
200	= N
special	= X

Angle:	Order Code character
0°	= A
90°	= B
180°	= C
270°	= D
special	= X

Type:	Order No
light	= 2
heavy	= 3
punch larger, light	= 4
punch larger, heavy	= 5

Ordering Code (Example):

2 2 4 2 . 2 F 1 . 0 6 5 0 . 0 4 5 0 B

- Angle = 90° (B)
- Format: Slot, width W = 4,5 mm (0450)
- Format: Slot, length P = 6,5 mm (0650)
- Punch length: l_1 = 13 mm (1)
- Length: l = 90 mm (F)
- Diameter: d_2 = 10 mm (2)
- Type = light (2)
- Version: Slot (4)
- Punch: without ejector pin (22)

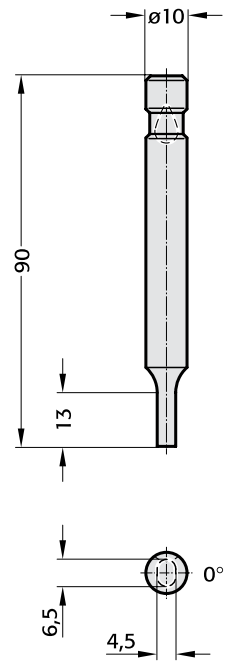

Ball-Lock Punches, blank, light duty 2202.
Ball-Lock Punches, stepped, light duty 2212.

2202.

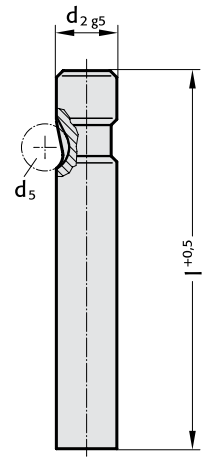

Material:

HSS
hardened: 62 ± 2 HRC

Execution:

Shaft fine ground.

2212.

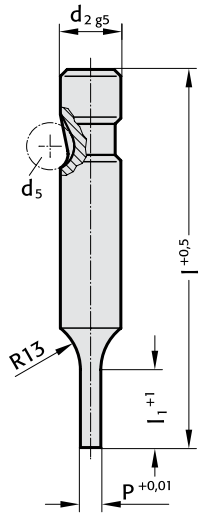

Material:

HSS
hardened: 62 ± 2 HRC

Execution:

Shaft and punch diameter fine ground.

2202.

		l										
d_2	d_5	63	71	80	90	100	110	125	140	150	175	200
6	6	●	●	●	●	●						
10	8	●	●	●	●	●	●	●				
13	8	●	●	●	●	●	●	●	●	●	●	
16	8	●	●	●	●	●	●	●	●	●	●	
20	8	●	●	●	●	●	●	●	●	●	●	
25	8	●	●	●	●	●	●	●	●	●	●	●
32	8		●	●	●	●	●	●	●	●	●	●
38	8			●	●	●	●	●	●	●	●	●

Other lengths on request.

Ordering example:

see fold out page E31.

2212.

						l				
d_2	d_5	P		l_1		63	71	80	90	100
6	6	1,6– 5,9	13*			●	●	●	●	●
10	8	1,6– 9,9	13*	19*		●	●	●	●	●
13	8	5,0–12,9	13	19		●	●	●	●	●
16	8	8,0–15,9	13	19	25	●	●	●	●	●
20	8	12,0–19,9	13	19	25	●	●	●	●	●
25	8	16,0–24,9	13	19	25	●	●	●	●	●
32	8	24,0–31,9	13	19	25		●	●	●	●
38	8	30,0–37,9	19	25	30			●	●	●

* l_1 = 10 where P < 2,20

Other lengths on request.

Ordering example:

see fold out page E31.

FIBRO

2222. 2232. 2242. 2252. Ball-Lock Punches, stepped, light duty

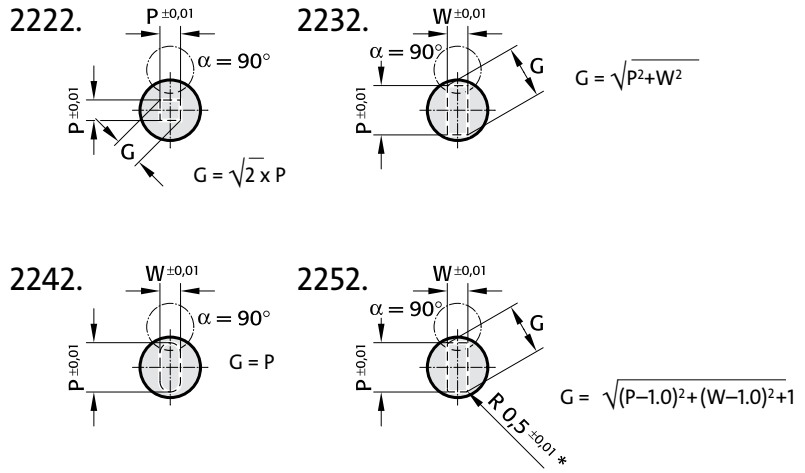

* For other radius options, see standardised special shapes, pages E 84 – E 85.

Material:

HSS
hardened: 62 ± 2 HRC

Execution:

Shaft and punch shape fine ground.

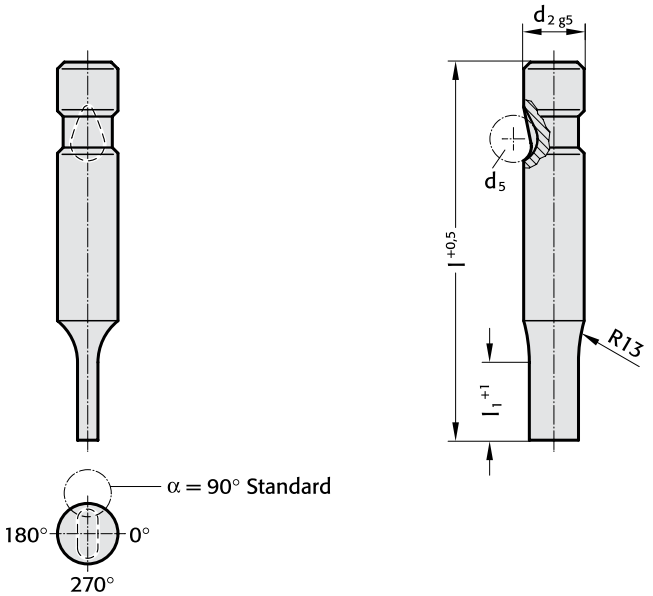

d_2	d_5	$W_{min.}$	$G_{max.}$	l_1			l 63	71	80	90	100
6	6	1,6	5,9	13*			●	●	●	●	●
10	8	1,6	9,9	13*	19*		●	●	●	●	●
13	8	4,5	12,9	13	19		●	●	●	●	●
16	8	6,0	15,9	13	19	25	●	●	●	●	●
20	8	8,0	19,9	13	19	25	●	●	●	●	●
25	8	10,0	24,9	13	19	25	●	●	●	●	●
32	8	12,5	31,9	13	19	25		●	●	●	●
38	8	14,0	37,9	19	25	30			●	●	●

* l_1 = 10 where P or W < 2,20

Other lengths on request.

Ordering example:

see fold out page E31.

Ball-Lock Punches, blank with ejector pin, light duty (replaces 2672.) 2702.
Ball-Lock Punches, stepped with ejector pin, light duty (replaces 2682.) 2712.

2702.

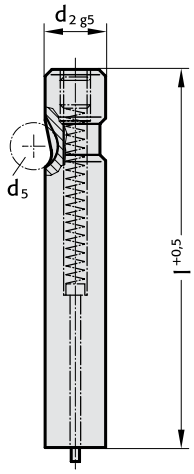

Material:

HSS
hardened: 62 ± 2 HRC

Execution:

Shaft fine ground.

2712.

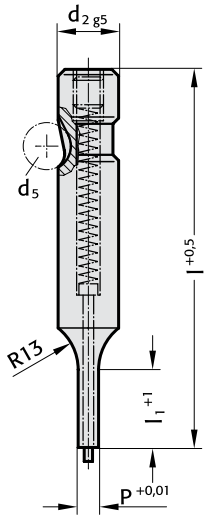

Material:

HSS
hardened: 62 ± 2 HRC

Execution:

Shaft and punch diameter fine ground.

2702.

		l				
d_2	d_5	63	71	80	90	100
6	6	●	●	●	●	●
10	8	●	●	●	●	●
13	8	●	●	●	●	●
16	8	●	●	●	●	●
20	8	●	●	●	●	●
25	8	●	●	●	●	●
32	8		●	●	●	●
38	8			●	●	●

Other lengths on request

Ordering example:

see fold out page E31.

2712.

						l			
d_2	d_5	P	l_1		63	71	80	90	100
6	6	1,6– 5,9	13*		●	●	●	●	●
10	8	1,6– 9,9	13*	19*	●	●	●	●	●
13	8	5,0–12,9	13	19	●	●	●	●	●
16	8	8,0–15,9	13	19 25	●	●	●	●	●
20	8	12,0–19,9	13	19 25	●	●	●	●	●
25	8	16,0–24,9	13	19 25	●	●	●	●	●
32	8	24,0–31,9	13	19 25		●	●	●	●
38	8	30,0–37,9	19	25 30			●	●	●

* l_1 = 10 where P < 2,20

Other lengths on request.

Ordering example:

see fold out page E31.

FIBRO

2722. 2732. 2742. 2752. (replaces 2682.)

Ball-Lock Punches, stepped with ejector pin, light duty

2722.

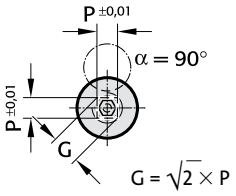

2732.

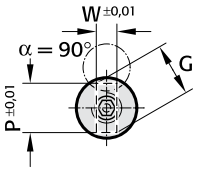

$G = \sqrt{P^2+W^2}$

2742.

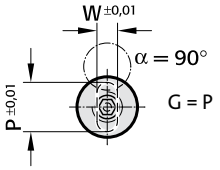

2752.

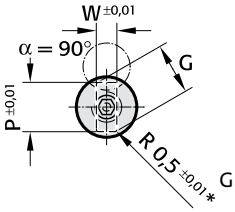

$G = \sqrt{(P-1.0)^2+(W-1.0)^2+1}$

* For other radius options, see standardised special shapes, pages E 84 – E 85.

Material:

HSS
hardened: 62 ± 2 HRC

Execution:

Shaft and punch shape fine ground.

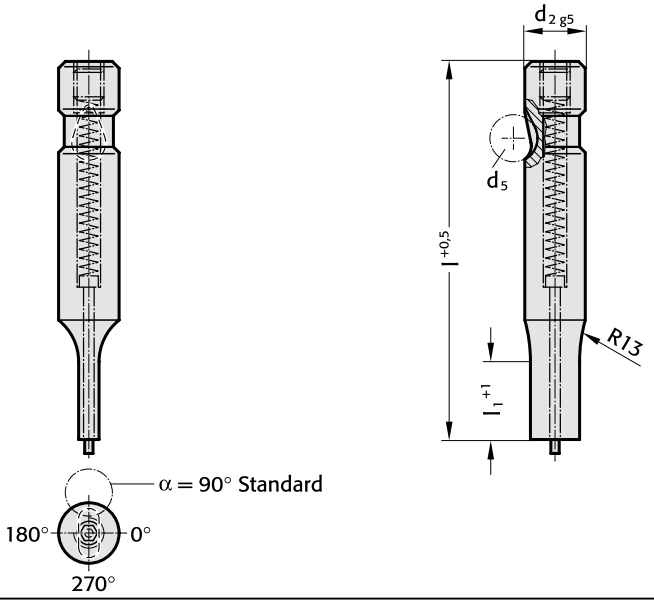

d_2	d_5	$W_{min.}$	$G_{max.}$	M	l_1			l 63	71	80	90	100
6	6	1,6	5,9	3	13*			●	●	●	●	●
10	8	1,6	9,9	5	13*	19*		●	●	●	●	●
13	8	4,5	12,9	5	13	19		●	●	●	●	●
16	8	6,0	15,9	6	13	19	25	●	●	●	●	●
20	8	8,0	19,9	6	13	19	25	●	●	●	●	●
25	8	10,0	24,9	6	13	19	25	●	●	●	●	●
32	8	12,5	31,9	8	13	19	25		●	●	●	●
38	8	14,0	37,9	8	19	25	30			●	●	●

* l_1 = 10 where P or W < 2,20

Other lengths on request.

Ordering example:

see fold out page E31.

Ball-Lock Punches, punch larger than shaft, light duty

2204.
2214.

2204./2214.

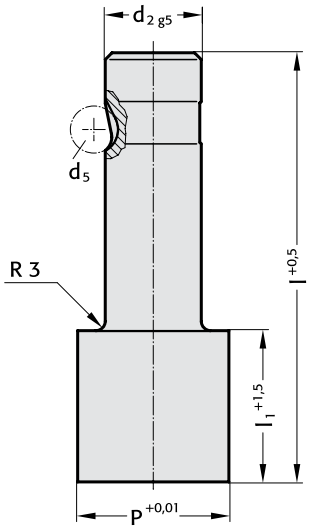

Material:

HSS
hardened: 62 ± 2 HRC

Execution:

Shaft and punch diameter fine ground.

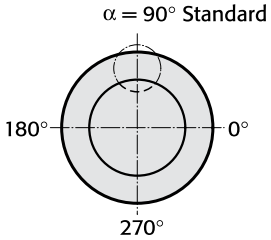

2204.

d_2	d_5	P	l_1		l 80	90	100
13	8	32,0	19	30	●	●	●
16	8	38,0	19	30	●	●	●
20	8	40,0	19	30	●	●	●
25	8	44,0	19	30	●	●	●
32	8	50,0	19	30	●	●	●

Other lengths on request.

Ordering example:

see fold out page E31.

2214.

d_2	d_5	P	l_1		l 80	90	100
13	8	13,1 – 32,0	19	30	●	●	●
16	8	16,1 – 38,0	19	30	●	●	●
20	8	20,1 – 40,0	19	30	●	●	●
25	8	25,1 – 44,0	19	30	●	●	●
32	8	32,1 – 50,0	19	30	●	●	●

Other lengths on request.

Ordering example:

see fold out page E31.

FIBRO

2224. 2234. 2244. 2254.

Ball-Lock Punches, punch larger than shaft, light duty

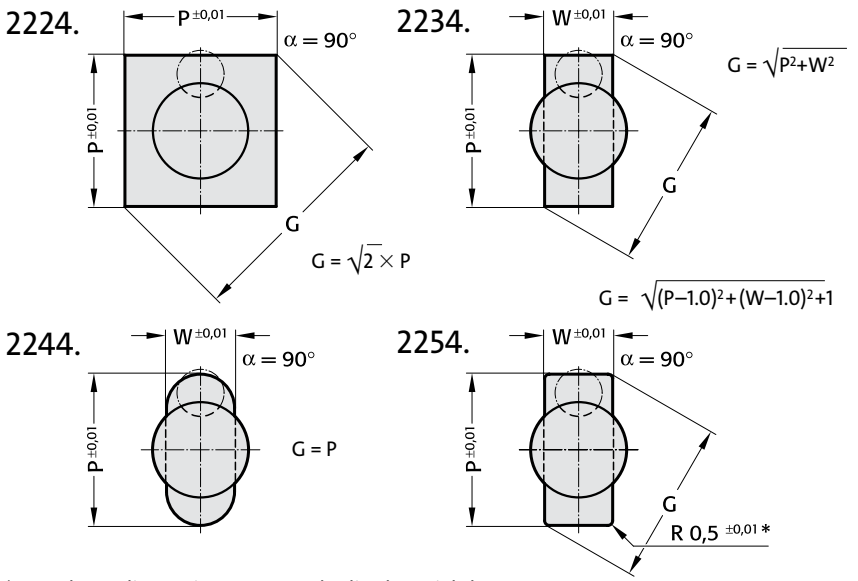

* For other radius options, see standardised special shapes, pages E 84 – E 85.

Material:

HSS
hardened: 62 ± 2 HRC

Execution:

Shaft and punch shape fine ground.

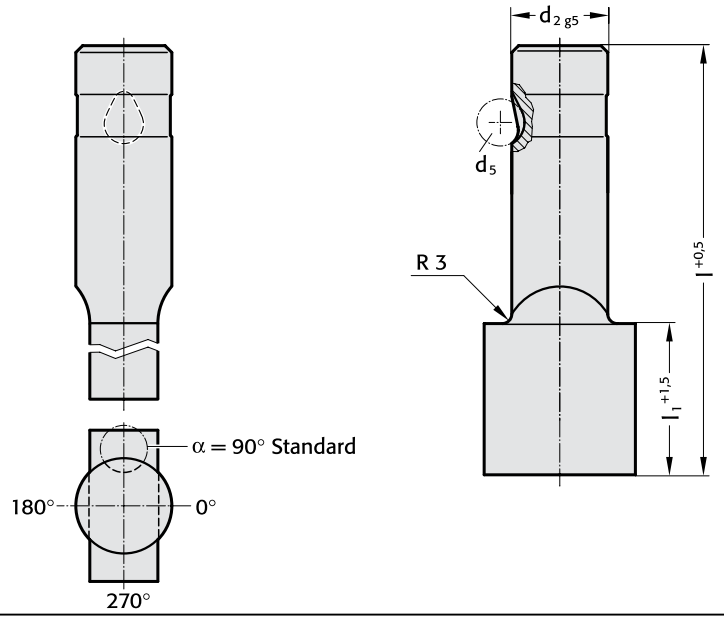

d_2	d_5	$W_{min.}$	$G_{max.}$	l_1		l 80	90	100
13	8	5,0	32,0	19	30	●	●	●
16	8	6,5	38,0	19	30	●	●	●
20	8	8,0	40,0	19	30	●	●	●
25	8	10,0	44,0	19	30	●	●	●
32	8	11,5	50,0	19	30	●	●	●

Other lengths on request.

Ordering example:

see fold out page E31.

Ball-Lock Punches, punch larger than shaft, light duty with ejector pin

FIBRO

2704.
2714.

2704./2714.

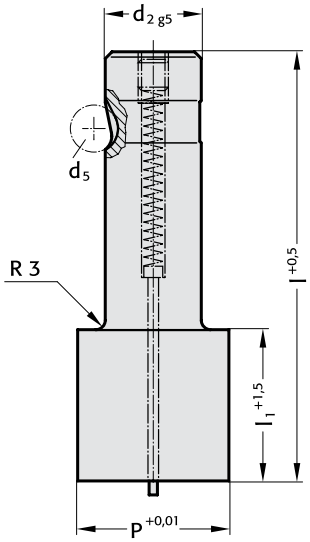

Material:

HSS
hardened: 62 ± 2 HRC

Execution:

Shaft and punch diameter fine ground.

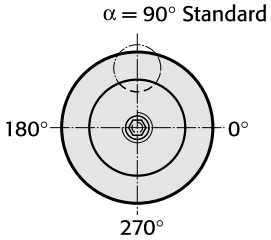

2704.

d_2	d_5	P	l_1		l 80	90	100
13	8	32,0	19	30	●	●	●
16	8	38,0	19	30	●	●	●
20	8	40,0	19	30	●	●	●
25	8	44,0	19	30	●	●	●
32	8	50,0	19	30	●	●	●

Other lengths on request.

Ordering example:

see fold out page E31.

2714.

d_2	d_5	P	l_1		l 80	90	100
13	8	13,1 – 32,0	19	30	●	●	●
16	8	16,1 – 38,0	19	30	●	●	●
20	8	20,1 – 38,0	19	30	●	●	●
25	8	25,1 – 45,0	19	30	●	●	●
32	8	32,1 – 50,0	19	30	●	●	●

Other lengths on request.

Ordering example:

see fold out page E31.

FIBRO

2724. 2734. 2744. 2754.

Ball-Lock Punches, punch larger than shaft, light duty with ejector pin

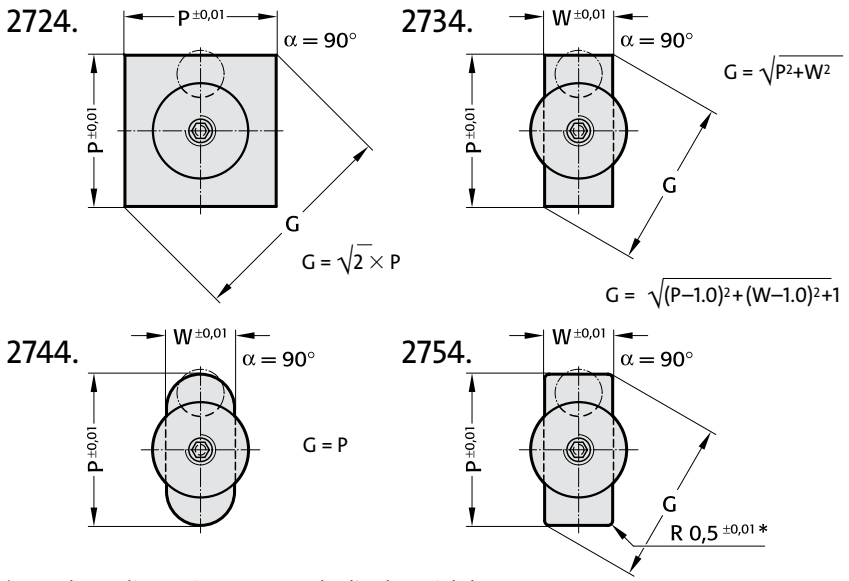

* For other radius options, see standardised special shapes, pages E 84 – E 85.

Material:

HSS
hardened: 62 ± 2 HRC

Execution:

Shaft and punch shape fine ground.

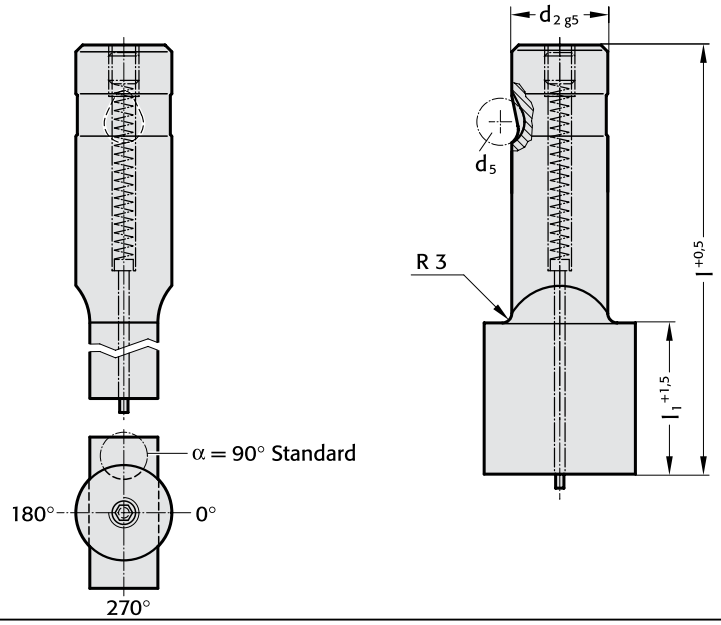

d_2	d_5	$W_{min.}$	$G_{max.}$	l_1		l 80	l 90	l 100
13	8	5,0	32,0	19	30	●	●	●
16	8	6,5	38,0	19	30	●	●	●
20	8	8,0	40,0	19	30	●	●	●
25	8	10,0	44,0	19	30	●	●	●
32	8	11,5	50,0	19	30	●	●	●

Other lengths on request.

Ordering example:

see fold out page E31.

Ball-Lock Pilot Pins, with tapered tip, light duty

2262.

2262.

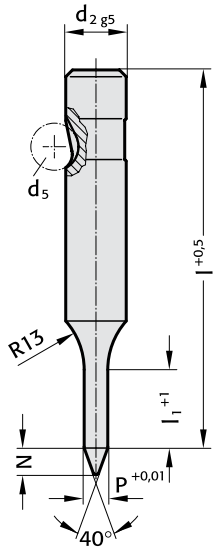

Material:

HSS
hardened: 62 ± 2 HRC

Execution:

Shaft and pilot pin fine ground.

2262.

					l							
d_2	d_5	P	l_1	N	71	80	90	100	110	125	140	150
10	8	5,9 – 9,9	19	8	●	●	●	●	●			
13	8	9,9 – 12,9	19	10	●	●	●	●	●	●	●	
16	8	12,9 – 15,9	25	15	●	●	●	●	●	●	●	●
20	8	15,9 – 19,9	25	20	●	●	●	●	●	●	●	●
25	8	19,9 – 24,9	25	25	●	●	●	●	●	●	●	●
32	8	24,9 – 31,9	25	30		●	●	●	●	●	●	●
38	8	31,9 – 37,9	30	35		●	●	●	●	●	●	●

Other lengths on request..

Ordering example:

see fold out page E31.

2272.

Ball-Lock Pilot Pins, with parabolic tip, light duty

2272.

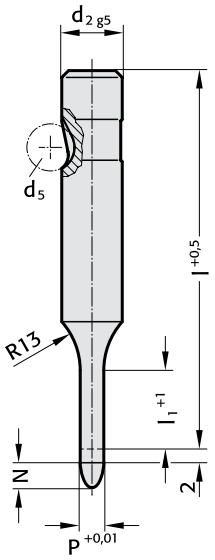

„l“ length of pilot pin is without tip

Note: The 2 mm length provides full guidance before the blanking punch contacts the sheet metal.

Material:

HSS
hardened: 62 ± 2 HRC

Execution:

Shaft and pilot pin fine ground.

P	N
≤ 10 mm	8 mm
10,1 mm – 15 mm	12 mm
> 15 mm	15 mm

2272.

				l						
d_2	d_5	P	l_1	50	56	63	71	80	90	100
6	6	2,9 – 5,9	13	●	●	●	●	●	●	●
10	8	5,9 – 9,9	19	●	●	●	●	●	●	●
13	8	9,9 – 12,9	19	●	●	●	●	●	●	●
16	8	12,9 – 15,9	25			●	●	●	●	●
20	8	15,9 – 19,9	25			●	●	●	●	●
25	8	19,9 – 24,9	25			●	●	●	●	●
32	8	24,9 – 31,9	25				●	●	●	●
38	8	31,9 – 37,9	30					●	●	●

Other lengths on request.

Ordering example:

see fold out page E31.

Ball-Lock Punches, blank, heavy duty 2203.
Ball-Lock Punches, stepped, heavy duty 2213.

2203.

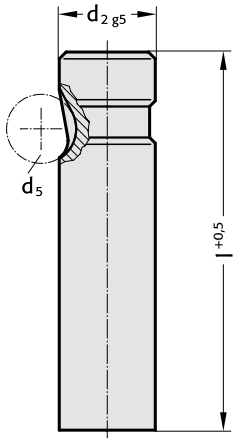

Material:

HSS
hardened: 62 ± 2 HRC

Execution:

Shaft fine ground.

2213.

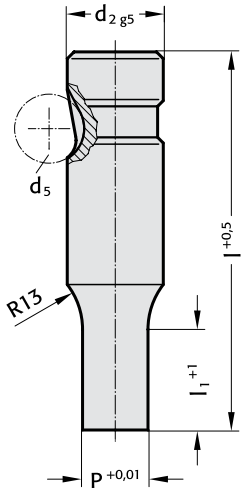

Material:

HSS
hardened: 62 ± 2 HRC

Execution:

Shaft and punch diameter fine ground.

2203.

		l										
d_2	d_5	63	71	80	90	100	110	125	140	150	175	200
10	10	●	●	●	●	●	●	●				
13	12	●	●	●	●	●	●	●	●	●	●	
16	12	●	●	●	●	●	●	●	●	●	●	
20	12	●	●	●	●	●	●	●	●	●	●	
25	12		●	●	●	●	●	●	●	●	●	●
32	12		●	●	●	●	●	●	●	●	●	●
40	12			●	●	●	●	●	●	●	●	●

Other lengths on request.

Ordering example:

see fold out page E31.

2213.

				l						
d_2	d_5	P	l_1	63	71	80	90	100	110	125
10	10	1,6– 9,9	13* 19*	●	●	●	●	●	●	●
13	12	5,0–12,9	13 19	●	●	●	●	●	●	●
16	12	8,0–15,9	13 19 25	●	●	●	●	●	●	●
20	12	12,0–19,9	13 19 25	●	●	●	●	●	●	●
25	12	16,0–24,9	13 19 25		●	●	●	●	●	●
32	12	24,0–31,9	13 19 25		●	●	●	●	●	●
40	12	30,0–39,9	19 25 30			●	●	●	●	●

* l_1 = 10 where P < 2,20
Other lengths on request.

Ordering example:

see fold out page E31.

2-1738-2002-1 °

FIBRO

2223. 2233. 2243. 2253.

Ball-Lock Punches, stepped, heavy duty

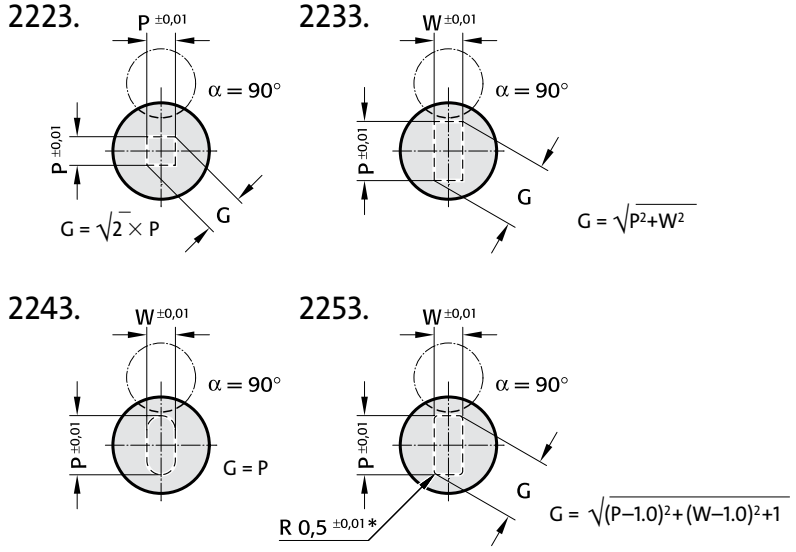

* For other radius options, see standardised special shapes, pages E 84 – E 85.

Material:

HSS
hardened: 62 ± 2 HRC

Execution:

Shaft and punch shape fine ground.

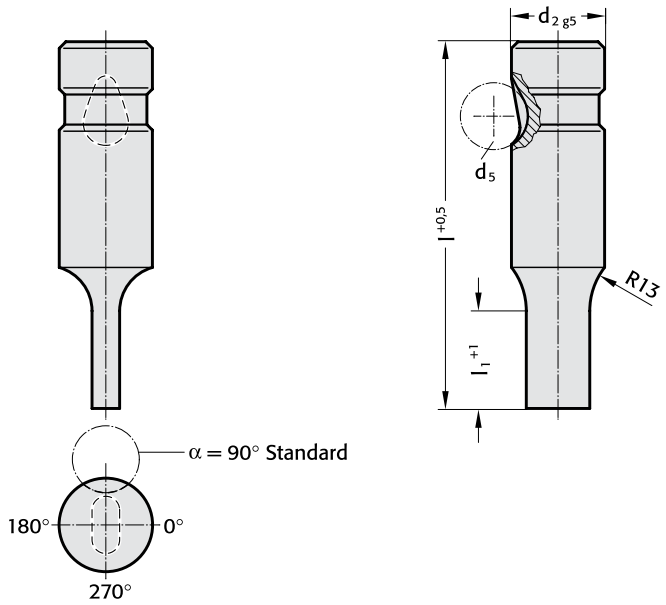

							l						
d_2	d_5	$W_{min.}$	$G_{max.}$		l_1		63	71	80	90	100	110	125
10	10	1,6	9,9	13*	19*		●	●	●	●	●	●	●
13	12	4,5	12,9	13	19		●	●	●	●	●	●	●
16	12	6,0	15,9	13	19	25	●	●	●	●	●	●	●
20	12	8,0	19,9	13	19	25	●	●	●	●	●	●	●
25	12	10,0	24,9	13	19	25		●	●	●	●	●	●
32	12	12,5	31,9	13	19	25		●	●	●	●	●	●
40	12	14,0	39,9	19	25	30			●	●	●	●	●

*l_1 = 10 where P or W < 2,20
Other lengths on request.

Ordering example:

see fold out page E31.

2.17379-2002-1 •

Ball-Lock Punches
blank with ejector pin, heavy duty (replaces 2673.) 2703.
stepped with ejector pin, heavy duty (replaces 2683.) 2713.

FIBRO

2703.

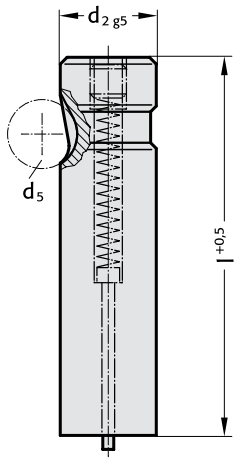

Material:
HSS
hardened: 62 ± 2 HRC

Execution:
Shaft fine ground.

2713.

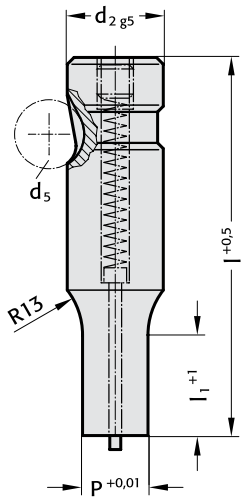

Material:
HSS
hardened: 62 ± 2 HRC

Execution:
Shaft and punch diameter fine ground.

2703.

		l						
d_2	d_5	63	71	80	90	100	110	125
10	10	●	●	●	●	●		
13	12	●	●	●	●	●	●	●
16	12	●	●	●	●	●	●	●
20	12	●	●	●	●	●	●	●
25	12		●	●	●	●	●	●
32	12		●	●	●	●	●	●
40	12			●	●	●	●	●

Other lengths on request.

Ordering example:
see fold out page E31.

2713.

					l							
d_2	d_5	P	l_1			63	71	80	90	100	110	125
10	10	1,6– 9,9	13*	19*		●	●	●	●	●		
13	12	5,0–12,9	13	19		●	●	●	●	●	●	●
16	12	8,0–15,9	13	19	25	●	●	●	●	●	●	●
20	12	12,0–19,9	13	19	25	●	●	●	●	●	●	●
25	12	16,0–24,9	13	19	25		●	●	●	●	●	●
32	12	24,0–31,9	13	19	25		●	●	●	●	●	●
40	12	30,0–39,9	19	25	30			●	●	●	●	●

* l_1 = 10 mm where < 2,20
Other lengths on request.

Ordering example:
see fold out page E31.

FIBRO

2723. 2733. 2743. 2753.
replaces 2683.

Ball-Lock Punches, stepped with ejector pin, heavy duty

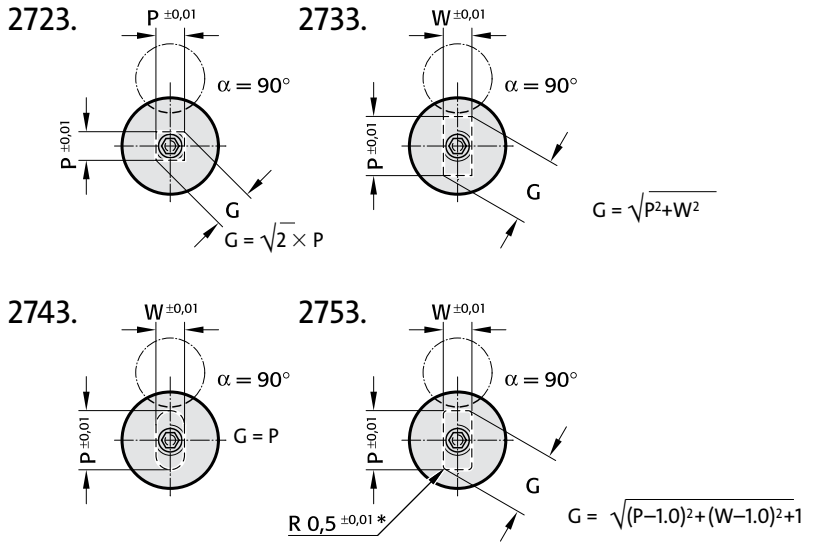

* For other radius options, see standardised special shapes, pages E 84 – E 85.

Material:

HSS
hardened: 62 ± 2 HRC

Execution:

Shaft and punch shape fine ground.

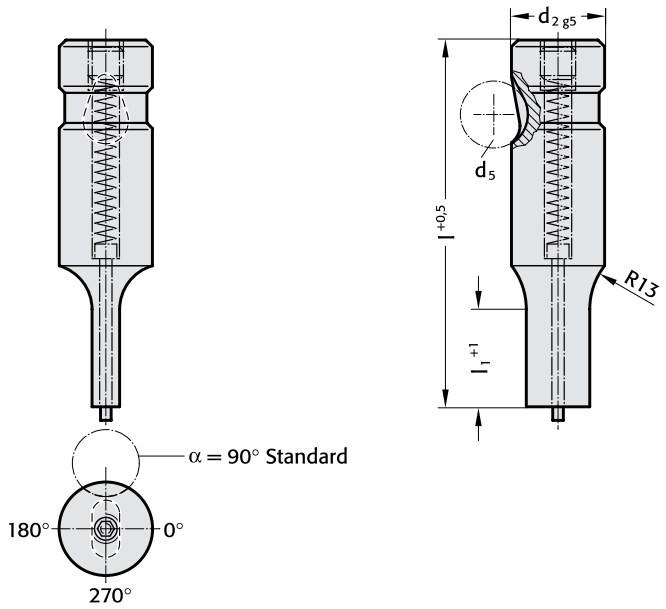

							l						
d_2	d_5	$W_{min.}$	$G_{max.}$		l_1		63	71	80	90	100	110	125
10	10	1,6	9,9	13*	19*		●	●	●	●	●		
13	12	4,5	12,9	13	19		●	●	●	●	●	●	●
16	12	6,0	15,9	13	19	25	●	●	●	●	●	●	●
20	12	8,0	19,9	13	19	25	●	●	●	●	●	●	●
25	12	10,0	24,9	13	19	25		●	●	●	●	●	●
32	12	12,5	31,9	13	19	25		●	●	●	●	●	●
40	12	14,0	39,9	19	25	30			●	●	●	●	●

* l_1 = 10 where P or W < 2,20
Other lengths on request.

Ordering example:

see fold out page E31.

Ball-Lock Punches, punch larger than shaft, heavy duty

2205.
2215.

2205./2215.

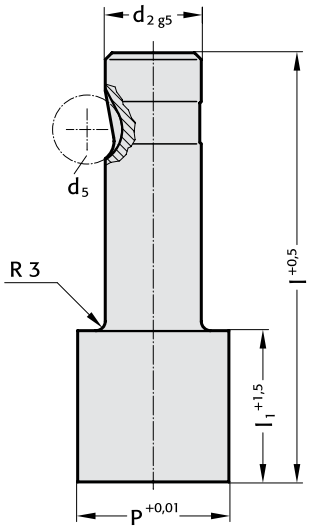

Material:

HSS
hardened: 62 ± 2 HRC

Execution:

Shaft and punch diameter fine ground.

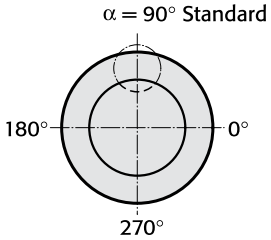

2205.

d_2	d_5	P	l_1		l 80	90	100
13	12	32,0	19	30	●	●	●
16	12	38,0	19	30	●	●	●
20	12	40,0	19	30	●	●	●
25	12	44,0	19	30	●	●	●
32	12	50,0	19	30	●	●	●
40	12	56,0	19	30	●	●	●

Other lengths on request.

Ordering example:

see fold out page E31.

2215.

d_2	d_5	P	l_1		l 80	90	100
13	12	13,1 – 32,0	19	30	●	●	●
16	12	16,1 – 38,0	19	30	●	●	●
20	12	20,1 – 40,0	19	30	●	●	●
25	12	25,1 – 44,0	19	30	●	●	●
32	12	32,1 – 50,0	19	30	●	●	●
40	12	40,1 – 56,0	19	30	●	●	●

Other lengths on request.

Ordering example:

see fold out page E31.

FIBRO

2225. 2235. 2245. 2255.

Ball-Lock Punches, punch larger than shaft, heavy duty

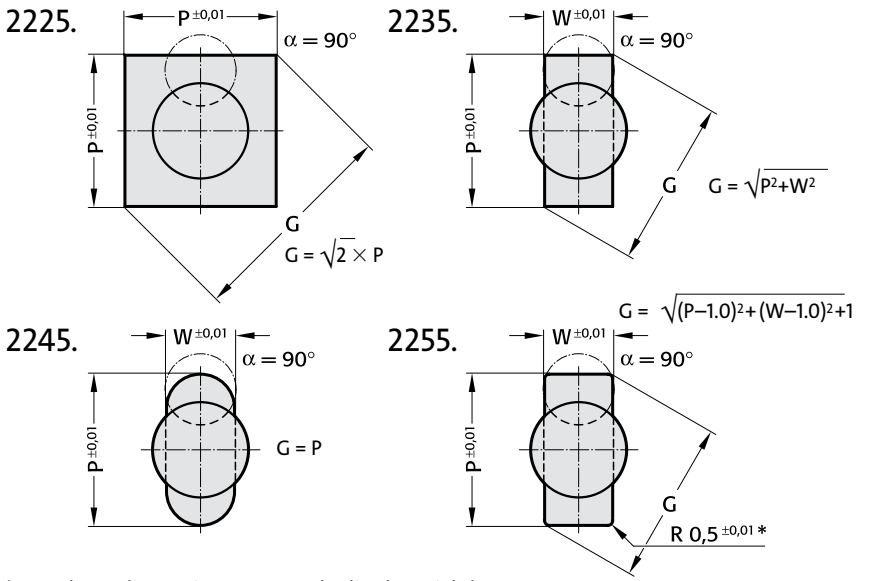

* For other radius options, see standardised special shapes, pages E 84 – E 85.

Material:

HSS
hardened: 62 ± 2 HRC

Execution:

Shaft and punch shape fine ground.

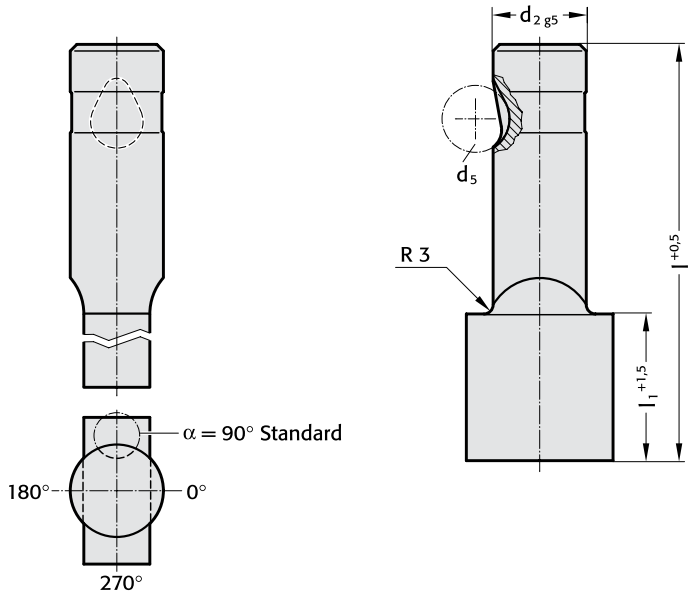

d_2	d_5	$W_{min.}$	$G_{max.}$	l_1		l 80	90	100
13	12	5,0	32,0	19	30	●	●	●
16	12	6,5	38,0	19	30	●	●	●
20	12	8,0	40,0	19	30	●	●	●
25	12	10,0	44,0	19	30	●	●	●
32	12	11,5	50,0	19	30	●	●	●
40	12	14,0	56,0	19	30	●	●	●

Other lengths on request.

Ordering example:

see fold out page E31.

Ball-Lock Punches, punch larger than shaft, heavy duty with ejector pin

FIBRO

2705.
2715.

2705./2715.

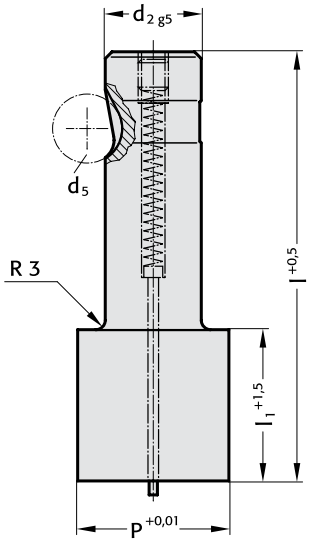

Material:

HSS
hardened: 62 ± 2 HRC

Execution:

Shaft and punch diameter fine ground.

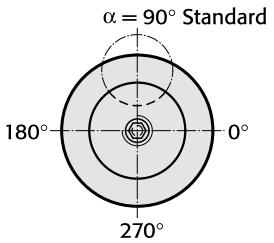

2705.

d_2	d_5	P	l_1		l 80	90	100
13	12	32,0	19	30	●	●	●
16	12	38,0	19	30	●	●	●
20	12	40,0	19	30	●	●	●
25	12	44,0	19	30	●	●	●
32	12	50,0	19	30	●	●	●
40	12	56,0	19	30	●	●	●

Other lengths on request.

Ordering example:

see fold out page E31.

2715.

d_2	d_5	P	l_1		l 80	90	100
13	12	13,1 – 32,0	19	30	●	●	●
16	12	16,1 – 38,0	19	30	●	●	●
20	12	20,1 – 40,0	19	30	●	●	●
25	12	25,1 – 44,0	19	30	●	●	●
32	12	32,1 – 50,0	19	30	●	●	●
40	12	40,1 – 56,0	19	30	●	●	●

Other lengths on request.

Ordering example:

see fold out page E31.

FIBRO

2725. 2735. 2745. 2755.

Ball-Lock Punches, punch larger than shaft, heavy duty with ejector pin

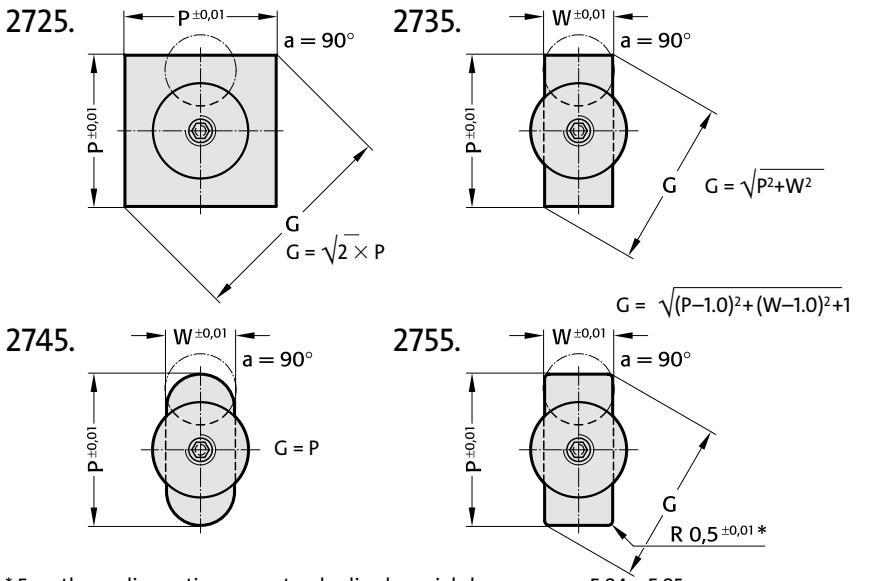

* For other radius options, see standardised special shapes, pages E 84 – E 85.

Material:

HSS
hardened: 62 ± 2 HRC

Execution:

Shaft and punch shape fine ground.

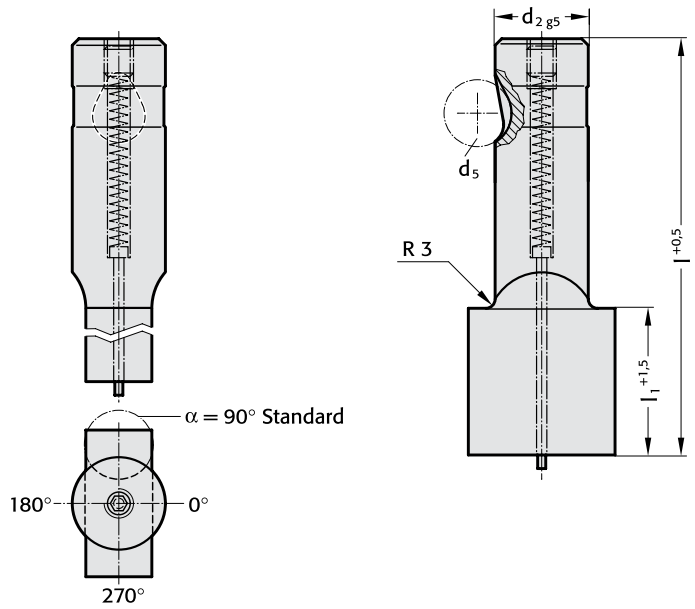

						l		
d_2	d_5	$W_{min.}$	$G_{max.}$	l_1		80	90	100
13	12	5,0	32,0	19	30	●	●	●
16	12	6,5	38,0	19	30	●	●	●
20	12	8,0	40,0	19	30	●	●	●
25	12	10,0	44,0	19	30	●	●	●
32	12	11,5	50,0	19	30	●	●	●
40	12	14,0	56,0	19	30	●	●	●

Other lengths on request.

Ordering example:

see fold out page E31.

Ball-Lock Pilot Pins, with tapered tip, heavy duty

2263.

2263.

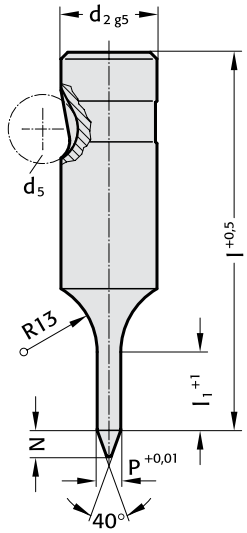

Material:

HSS
hardened: 62 ± 2 HRC

Execution:

Shaft and pilot pin fine ground.

2263.

					l							
d_2	d_5	P	l_1	N	71	80	90	100	110	125	140	150
10	10	5,9 – 9,9	19	8	●	●	●	●	●			
13	12	9,9 – 12,9	19	10	●	●	●	●	●	●	●	
16	12	12,9 – 15,9	25	15	●	●	●	●	●	●	●	●
20	12	15,9 – 19,9	25	20	●	●	●	●	●	●	●	●
25	12	19,9 – 24,9	25	25		●	●	●	●	●	●	●
32	12	24,9 – 31,9	25	30		●	●	●	●	●	●	●
40	12	31,9 – 39,9	30	40		●	●	●	●	●	●	●

Other lengths on request.

Ordering example:

see fold out page E31.

FIBRO

2273.

Ball-Lock Pilot Pins, with parabolic tip, heavy duty

2273.

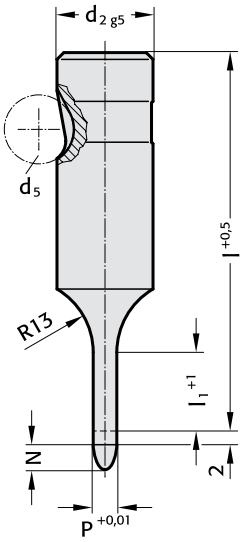

„l“ length of pilot pin is without tip

Note: The 2 mm length provides full guidance before the blanking punch contacts the sheet metal.

Material:

HSS
hardened: 62 ± 2 HRC

Execution:

Shaft and pilot pin fine ground.

P	N
≤ 10 mm	8 mm
10,1 mm – 15 mm	12 mm
> 15 mm	15 mm

2273.

				l						
d_2	d_5	P	l_1	63	71	80	90	100	110	125
10	10	5,9 – 9,9	19	●	●	●	●	●		
13	12	9,9 – 12,9	19	●	●	●	●	●	●	●
16	12	12,9 – 15,9	25	●	●	●	●	●	●	●
20	12	15,9 – 19,9	25	●	●	●	●	●	●	●
25	12	19,9 – 24,9	25	●	●	●	●	●	●	●
32	12	24,9 – 31,9	25		●	●	●	●	●	●
40	12	31,9 – 39,9	30			●	●	●	●	●

Other lengths on request.

Ordering example:

see fold out page E31.

Precision Punches
ISO

Ordering example
Precision Punches ISO 8020

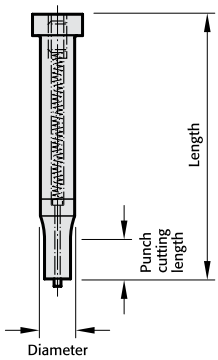

NB: See table for standard dimensions
Special dimensions to order

2 2 4 1 . 2 G 4 . 0 6 5 0 . 0 4 5 0 A

Punch:
22 without ejector pin
27 with ejector pin

Format: Slot length P = 6,5 mm

Format: Slot width W = 4,5 mm

Version:	Order No
blank	= 0
round	= 1
square	= 2
rectangular	= 3
slot	= 4
rectangle with radiused corners	= 5
pilot pin with tapered tip	= 6
pilot pin parabolic tip	= 7
special shapes	= 9

Type:	Order No
ISO	= 1

Diameter: d_1	Order No
3	= 1
4	= 2
5	= 3
6	= 4
8	= 5
10	= 6
13	= 7
16	= 8
20	= 9
25	= 10
32	= 11

Punch cutting length: l_1	Order No
8	= 1
10	= 2
13	= 3
19	= 4
25	= 5
30	= 6
special	= x

Lenght: l	Order Code character
50	= A
56	= B
63	= C
71	= D
80	= E
90	= F
100	= G
110	= H
120	= J
125	= K
140	= L
150	= M
200	= N
special	= X

Angle:	Order Code character
0°	= A
90°	= B
180°	= C
270°	= D
special	= X

Ordering Code (Example):

2 2 4 1 . 7 G 4 . 0 6 5 0 . 0 4 5 0 A

- Angle = 0° (A)
- Format: Slot, width W = 4,5 mm (0450)
- Format: Slot, length P = 6,5 mm (0650)
- Punch length: l_1 = 13 mm (4)
- Length: l = 100 mm (G)
- Diameter: d_1 = 13 mm (7)
- Type = ISO (1)
- Version: Slot (4)
- Punch: without ejector pin (22)

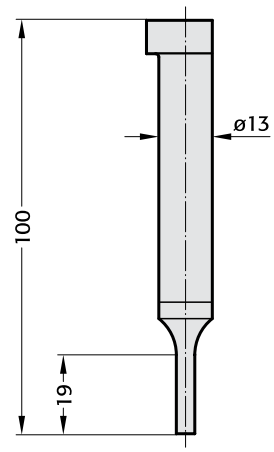

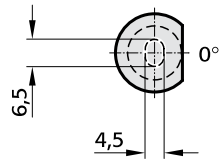

Precision Punches, ISO 8020 — 2201.
Precision Punches, stepped, ISO 8020 — 2211.

2201.

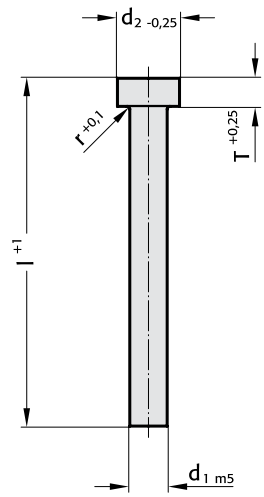

Material:

HSS

Hardness: shaft 64±2 HRC
head 52±5 HRC

ASP 23 – ASP 2023
Hardness: shaft 64±2 HRC
head 52±5 HRC

Ordering example: 2201.6D.ASP
Diameter d_1=10
Length =71
(see fold out pages)

Execution:

Punch head hot upset-forged, punch and shoulder fine ground.

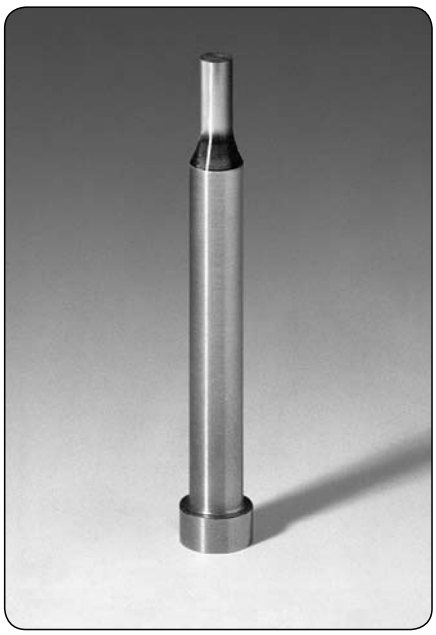

2211.

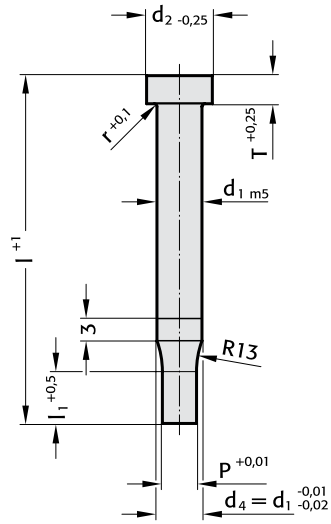

Material:

HSS

Hardness: shaft 64±2 HRC
head 52±5 HRC

ASP 23 – ASP 2023
upon request

Execution:

Punch head hot upset-forged, punch, shoulder and punch diameter fine ground.

2201.

d_1	d_2	r	T	l 71	80	90	100	120	150	200
3	5	0,25	3	●	●	●	●	●		
4	6		3	●	●	●	●	●		
5	8	0,3	5	●	●	●	●	●		
6	9		5	●	●	●	●	●		
8	11		5	●	●	●	●	●		
10	13		5	●	●	●	●	●	●	
13	16	0,4	5	●	●	●	●	●	●	
16	19		5	●	●	●	●	●	●	●
20	23		5	●	●	●	●	●	●	●
25	28		5	●	●	●	●	●	●	●
32	35		5	●	●	●	●	●	●	●

Ordering example:

see fold out page E55.

2211.

d_1	d_2	P	l_1	r	T	l 71	80	90	100	120
3	5	0,8– 2,9	8 10	0,25	3	●	●	●	●	●
4	6	1,0– 3,9	8 13		3	●	●	●	●	●
5	8	1,5– 4,9	13 19	0,3	5	●	●	●	●	●
6	9	1,6– 5,9	13 19		5	●	●	●	●	●
8	11	2,5– 7,9	19 25		5	●	●	●	●	●
10	13	4,0– 9,9	19 25		5	●	●	●	●	●
13	16	5,0–12,9	19 25	0,4	5	●	●	●	●	●
16	19	8,0–15,9	19 25		5	●	●	●	●	●
20	23	12,0–19,9	19 25		5	●	●	●	●	●
25	28	16,5–24,9	19 25		5	●	●	●	●	●
32	35	20,0–31,9	25 30		5	●	●	●	●	●

Ordering example:

see fold out page E55.

FIBRO

2221. 2231. 2241. 2251.

Precision Punches, stepped, ISO 8020

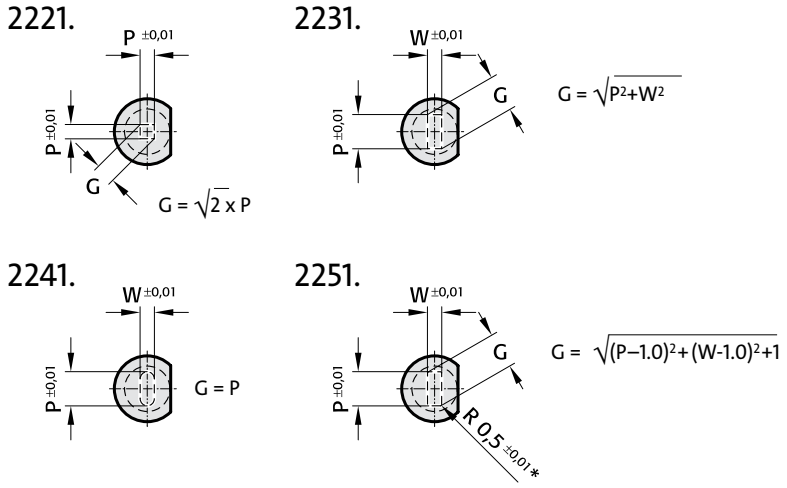

* For other radius options, see standardised special shapes, pages E 84 – E 85.

Material:

HSS

Hardness:	shaft	64±2 HRC
	head	52±5 HRC

Execution:

Punch head hot upset-forged, shaft, shoulder and punch shape fine ground.

The anti-rotation surface parallel to P = 0° as standard.

ASP 23 – ASP 2023
upon request

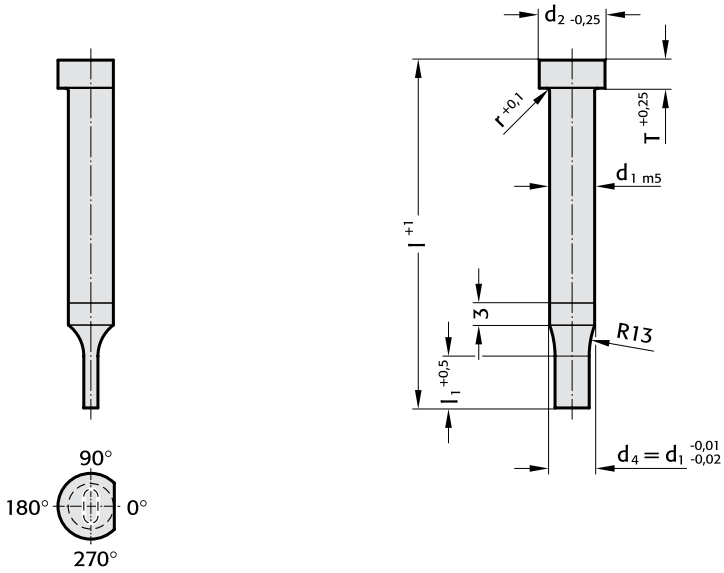

d_1	d_2	$W_{min.}G_{max.}$	l_1	r	T	l 71	80	90	100	120
3	5	0,5– 2,9	8 10	0,25	3	●	●	●	●	●
4	6	0,8– 3,9	8 13		3	●	●	●	●	●
5	8	1,0– 4,9	13 19	0,3	5	●	●	●	●	●
6	9	1,6– 5,9	13 19		5	●	●	●	●	●
8	11	2,0– 7,9	19 25		5	●	●	●	●	●
10	13	3,5– 9,9	19 25		5	●	●	●	●	●
13	16	4,5–12,9	19 25	0,4	5	●	●	●	●	●
16	19	6,0–15,9	19 25		5	●	●	●	●	●
20	23	8,0–19,9	19 25		5	●	●	●	●	●
25	28	10,0–24,9	19 25		5	●	●	●	●	●
32	35	10,0–31,9	25 30		5	●	●	●	●	●

Ordering example:

see fold out page E55.

Precision Punches, ISO 8020
blanc, with ejector pin
stepped, with ejector pin

FIBRO

(replaces 2671.) 2701.
(replaces 2681.) 2711.

2701.

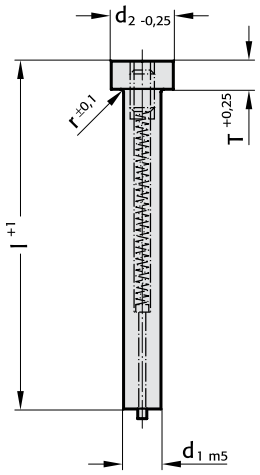

Material:

HSS

Hardness:	shaft	64±2 HRC
	head	52±5 HRC

Execution:

Punch head hot upset-forged, shaft and shoulder fine ground.

2711.

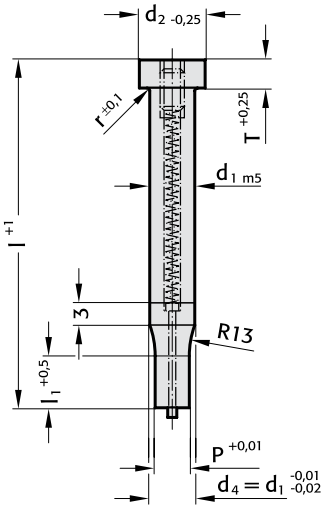

Material:

HSS

Hardness:	shaft	64±2 HRC
	head	52±5 HRC

Execution:

Punch head hot upset-forged, shaft, shoulder and punch diameter fine ground.

2701.

d_1	d_2	r	T	l 71	80	90	100	120
5	8	0,3	5	●	●	●	●	●
6	9		5	●	●	●	●	●
8	11		5	●	●	●	●	●
10	13		5	●	●	●	●	●
13	16	0,4	5	●	●	●	●	●
16	19		5	●	●	●	●	●
20	23		5	●	●	●	●	●
25	28		5	●	●	●	●	●
32	35		5	●	●	●	●	●

Ordering example:

see fold out page E55.

2711.

d_1	d_2	P	l_1	r	T	l 71	80	90	100	120
5	8	1,6– 4,9	13 19	0,3	3	●	●	●	●	●
6	9	2,5– 5,9	13 19		3	●	●	●	●	●
8	11	2,5– 7,9	19 25		5	●	●	●	●	●
10	13	4,0– 9,9	19 25		5	●	●	●	●	●
13	16	5,0–12,9	19 25	0,4	5	●	●	●	●	●
16	19	8,0–15,9	19 25		5	●	●	●	●	●
20	23	12,0–19,9	19 25		5	●	●	●	●	●
25	28	16,5–24,9	19 25		5	●	●	●	●	●
32	35	20,0–31,9	25 30		5	●	●	●	●	●

Ordering example:

see fold out page E55.

FIBRO

2721. 2731. 2741. 2751.
replaces 2681.

Precision Punches, stepped, with ejector pin ISO 8020

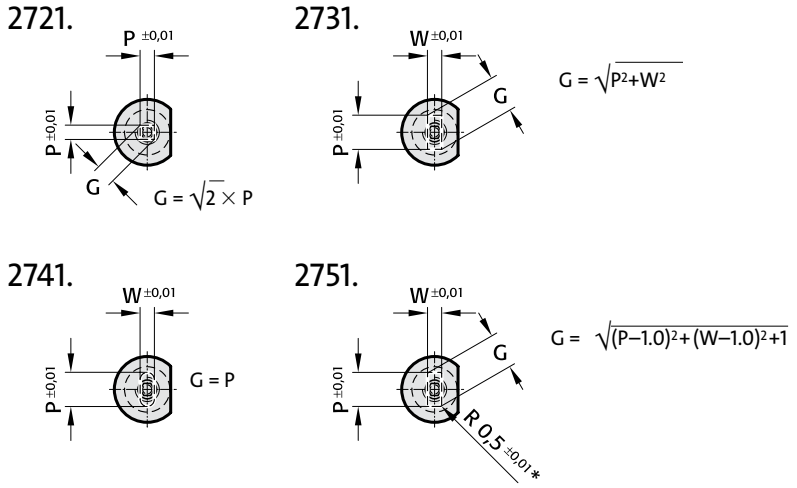

* For other radius options, see standardised special shapes, pages E 84 – E 85.

Material:

HSS

Hardness:	shaft	64±2 HRC
	head	52±5 HRC

Execution:

Punch head hot upset-forged, shoulder, shaft and punch shape fine ground.

The anti-rotation surface parallel to P = 0° as standard.

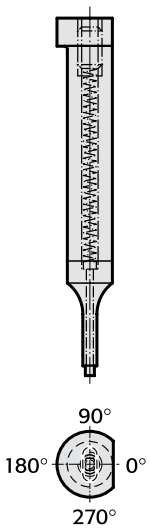

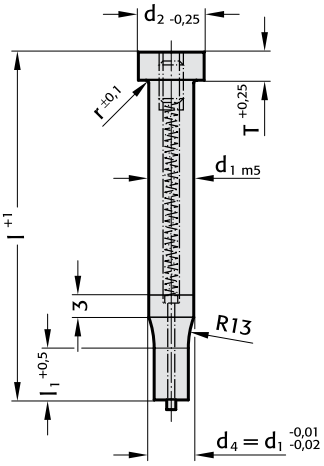

d_1	d_2	$W_{min}G_{max.}$	l_1		r	T	l 71	80	90	100	120
5	8	1,6– 4,9	13	19	0,3	5	●	●	●	●	●
6	9	2,5– 5,9	13	19		5	●	●	●	●	●
8	11	2,5– 7,9	19	25		5	●	●	●	●	●
10	13	4,0– 9,9	19	25		5	●	●	●	●	●
13	16	5,0–12,9	19	25	0,4	5	●	●	●	●	●
16	19	8,0–15,9	19	25		5	●	●	●	●	●
20	23	12,0–19,9	19	25		5	●	●	●	●	●
25	28	16,5–24,9	19	25		5	●	●	●	●	●
32	35	20,0–31,9	25	30		5	●	●	●	●	●

Ordering example:

see fold out page E55.

Pilot Pins with tapered tip, ISO 8020

2261.

2261.

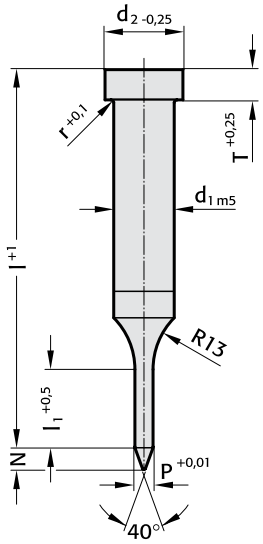

Material:

HSS
Hardness: shaft 64±2 HRC
head 52±5 HRC

Execution:

Head hot upset-forged, shoulder, shaft and pilot fine ground.

2261.

							l							
d_1	d_2	T	P	l_1		N	63	71	80	90	100	110	125	140
5	8	5	1,0– 4,9	13		4	●	●						
6	9	5	1,6– 5,9	13		5	●	●	●					
8	11	5	2,5– 7,9	13		6	●	●	●	●				
10	13	5	4,0– 9,9	13	19	8	●	●	●	●	●	●		
13	16	5	5,0–12,9	13	19	10	●	●	●	●	●	●	●	
16	19	5	8,0–15,9	13	19	25 15		●	●	●	●	●	●	●
20	23	5	12,0–19,9	13	19	25 20		●	●	●	●	●	●	●
25	28	5	16,5–24,9	13	19	25 25		●	●	●	●	●	●	●
32	35	5	20,0–31,9		19	25 30			●	●	●	●	●	●

Ordering example:

see fold out page E55.

FIBRO

2271.

Pilot Pins with parabolic tip, ISO 8020

2271.

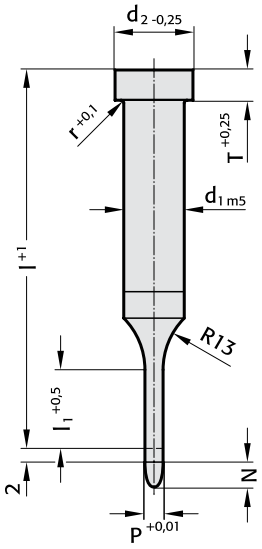

„l“ length of pilot pin is without tip

Note: The 2 mm length provides full guidance before the blanking punch contacts the sheet metal.

Material:

HSS
Hardness: shaft 64±2 HRC
head 52±5 HRC

Execution:

Head hot upset-forged, shoulder, shaft and pilot fine ground.

P		N
	≤ 10 mm	8 mm
10,1 mm	– 15 mm	12 mm
	> 15 mm	15 mm

2271.

										l		
d_1	d_2	T	P		l_1		50	56	63	71	80	90	100
5	8	5	1,0– 4,9	10	13		●	●	●	●			
6	9	5	1,6– 5,9	10	13		●	●	●	●	●		
8	11	5	2,5– 7,9	10	13		●	●	●	●	●		
10	13	5	4,0– 9,9	10	13	19	●	●	●	●	●	●	●
13	16	5	5,0–12,9	10	13	19	●	●	●	●	●	●	●
16	19	5	8,0–15,9		13	19	●	●	●	●	●	●	●
20	23	5	12,0–19,9		13	19		●	●	●	●	●	●
25	28	5	16,5–24,9		13	19		●	●	●	●	●	●
32	35	5	20,0–31,9			19				●	●	●	●

Ordering example:

see fold out page E55.

Pilot Units to Daimler Standard

2276.

2276.

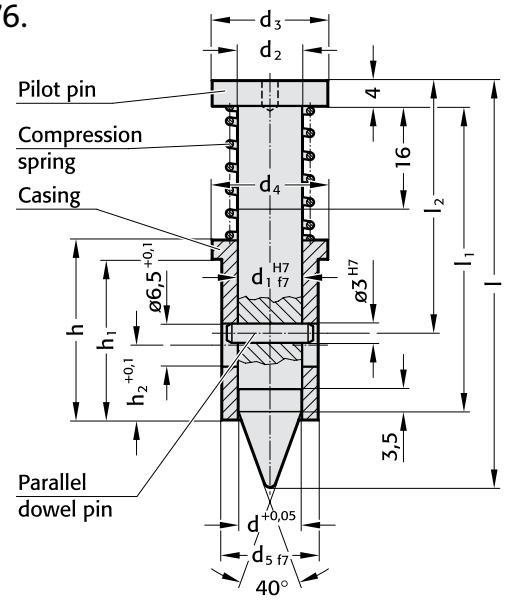

Description:

The pilot unit provides exact positioning of sheet metal parts. There are 2 sizes.

The pilot unit 10 can used for a hole diameter of 5 ~ 10 mm and is available as a finished item, 9.8 mm diameter. Smaller diameters have to be ground by the tool making department.

The pilot unit 16 is used for diameter 10 - 16 mm and is available as a blank, 15.8 mm diameter.

Material:

The pilot unit consists of:
Pilot pin, Casing, Compression spring, Parallel dowel pin.

2276.

Order No	d	d_1	d_2	d_3	d_4	d_5	h	h_1	h_2	l_1	l_2	l	Spring force in daN preloaded	compressed
2276.1.	9.8	10	10	18	18	15	28	25	12	47.5	39.3	63.2	4.9	6.2
2.	15.8	16	16	24	30	26	28	25	12	54.5	46.3	72.5	4.8	5.6

Ordering example:

2 2 7 6 . 1 . A . 0 9 8 0

- 0980 — Diameter d
- A — Length l
  A = 63,2 mm
  B = 72,5 mm
- 1 — Diameter d_1
  1 = 10 mm
  2 = 16 mm
- 6 — Daimler standard
- 7 — Pilot pin

Precision Matrixes

Ordering example
Precision Matrixes

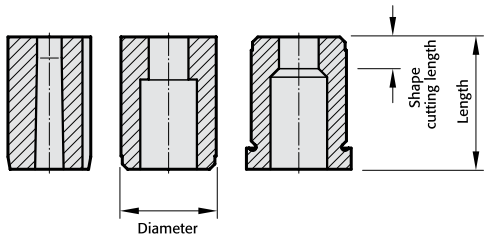

NB: See table for standard dimensions
Special dimensions to order

2 6 4 6 . 10 F 6 . 1 3 5 0 . 0 6 5 0 A 2

Matrixes:
26 matrixes

Format: Slot lenght
P = 13,5 mm

Format:
Slot width
W = 6,5 mm

Version:	Order No
blank (pilot hole bore)	= 0
round	= 1
square	= 2
rectangular	= 3
slot	= 4
rectangle with radiused corners	= 5
special shapes	= 9

Type:	Order No
automotive standard	= 5
without shoulder ISO 8977	= 6
with shoulder ISO 8977	= 7

Shape cutting lenght: l	Order No
2	= 1
3	= 2
4	= 3
5	= 4
6	= 5
8	= 6
10	= 7
12	= 8
special	= X

Diameter: d_2	Order No
5	= 1
6	= 2
8	= 3
10	= 4
13	= 5
16	= 6
20	= 7
22	= 8
25	= 9
32	= 10
38	= 11
40	= 12
45	= 13
50	= 14
56	= 15
63	= 16
71	= 17
76	= 18
86	= 19
90	= 20
100	= 21

Length: l1	Order Code character
13	= A
16	= B
20	= C
22	= D
25	= E
28	= F
30	= G
32	= H
35	= J
40	= K
special	= X

Angle:	Order Code character
0°	= A
90°	= B
180°	= C
270°	= D
special	= X

Anti-rotation element:	Order No
pin Ø 3	= 1
pin Ø 4	= 2
pin Ø 6	= 3
polished surface (continuous)	= 4
polished surface, top, 14 mm	= 5
polished surface, bottom, 14 mm	= 6
special	= X

Ordering Code (Example):

2 6 4 6 . 10 F 6 . 1 3 5 0 . 0 6 5 0 A 2

- Anti-rotation element = Pin Ø4 (2)
- Angle = 0° (A)
- Format: Slot, width W = 6,5 mm (0650)
- Format: Slot, length P = 13,5 mm (1350)
- Shape cutting length: l = 8 mm (6)
- Lenght: l_1 = 28 mm (F)
- Diameter: d_2 = 32 mm (10)
- Type = without shoulder ISO 8977 (6)
- Version: Slot (4)
- Matrixes: Matrixes (26)

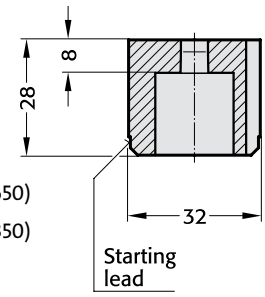

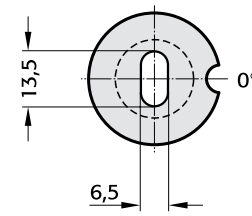

FIBRO

2606. 2616.
replaces 2603.

Precision Matrixes
without shoulder, cylindrical
ISO 8977

Material:
HSS
hardened: 62 ± 2 HRC

Execution:
Diameter d_2, starting lead and face surfaces ground.

Diameter P is a bored pilot hole for wire EDM.

2606.

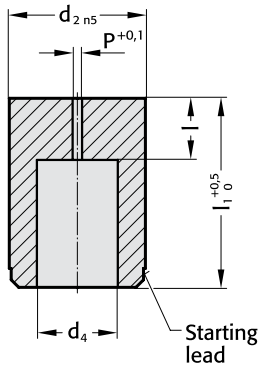

Material:
HSS
hardened: 62 ± 2 HRC

Execution:
Diameter d_2, starting lead and face surfaces ground.

2616.

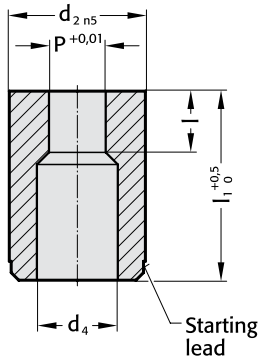

2606.

d_2	d_4	P	l	l_1 16	20	22	25	28	30	32	35	40
5	2,8	0,8	2	●	●	●	●	●	●	●	●	
6	3,5	1,0	3	●	●	●	●	●	●	●	●	
8	4,0	1,0	4	●	●	●	●	●	●	●	●	
10	5,8	1,0	4	8 ●	●	●	●	●	●	●	●	
13	8,0	1,2	5	8	●	●	●	●	●	●	●	
16	9,5	1,2	5	8	●	●	●	●	●	●	●	
20	12,0	1,5	8	12	●	●	●	●	●	●	●	
22	15,0	1,5	8	12	●	●	●	●	●	●	●	
25	17,3	1,5	8	12	●	●	●	●	●	●	●	
32	20,7	1,5	8	12	●	●	●	●	●	●	●	
40	27,7	1,5	8	12			●	●	●	●	●	
50	37,0	1,5	8	12			●	●	●	●	●	●

Other lengths on request

Ordering example:
see fold out page E65.

2616.

d_2	d_4	P	l	l_1 16	20	22	25	28	30	32	35	40
5	2,8	1,0– 2,4	2	●	●	●	●	●	●	●	●	
6	3,5	1,6– 3,0	3	●	●	●	●	●	●	●	●	
8	4,0	2,0– 3,5	4	●	●	●	●	●	●	●	●	
10	5,8	2,5– 5,0	4	8 ●	●	●	●	●	●	●	●	
13	8,0	4,0– 7,0	5	8	●	●	●	●	●	●	●	
16	9,5	6,0– 9,0	5	8	●	●	●	●	●	●	●	
20	12,0	8,0–11,0	8	12	●	●	●	●	●	●	●	
22	15,0	9,0–14,0	8	12	●	●	●	●	●	●	●	
25	17,3	10,7–16,0	8	12	●	●	●	●	●	●	●	
32	20,7	15,0–20,0	8	12	●	●	●	●	●	●	●	
40	27,7	19,0–27,0	8	12			●	●	●	●	●	
50	37,0	26,0–36,0	8	12			●	●	●	●	●	●

Ordering example:
see fold out page E65.

Precision Matrixes without shoulder, cylindrical ISO 8977

FIBRO

2626. 2636.
2646. 2656.

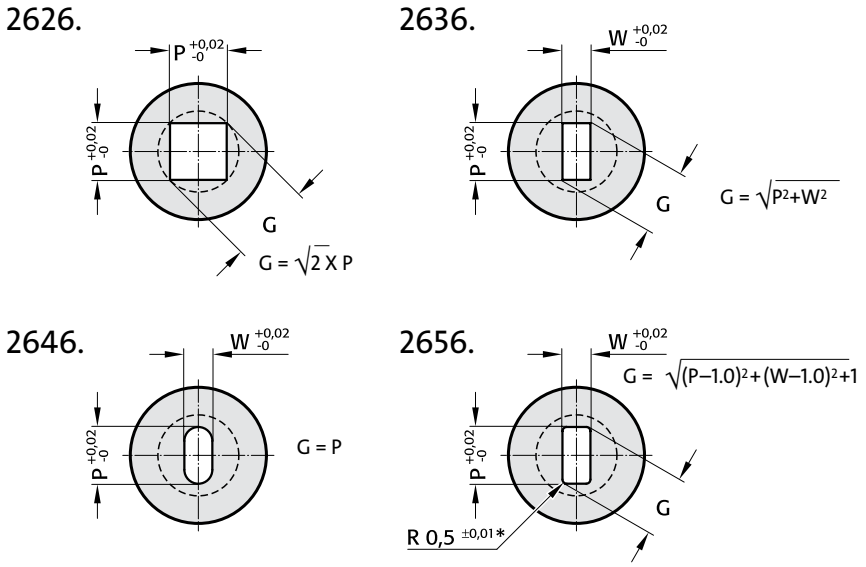

* For other radius options, see standardised special shapes, pages E 84 – E 85

Material:

HSS
hardened: 62 ± 2 HRC

Execution:

Diameter d_2, starting lead and face surfaces ground.

Anti-rotation element, see page E 69

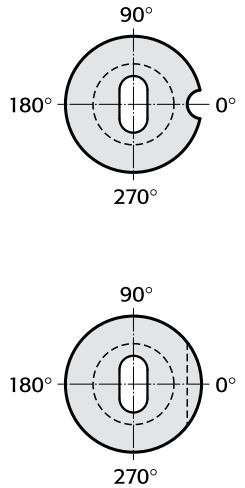

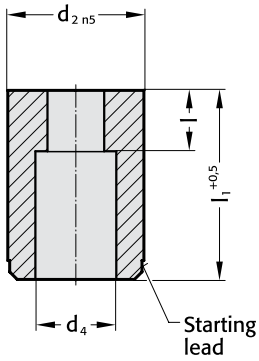

						l_1							
d_2	d_4	$W_{min.}$	$G_{max.}$	l		16	20	22	25	28	30	32	35	40
10	5,8	1,2	5,0	4	8	●	●	●	●	●	●	●	●	
13	8,0	2,0	7,0	5	8		●	●	●	●	●	●	●	
16	9,5	2,4	9,0	5	8		●	●	●	●	●	●	●	
20	12,0	3,2	11,0	8	12		●	●	●	●	●	●	●	
22	15,0	4,0	14,0	8	12		●	●	●	●	●	●	●	
25	17,3	4,8	16,0	8	12		●	●	●	●	●	●	●	
32	20,7	5,5	20,0	8	12		●	●	●	●	●	●	●	
40	27,7	6,4	27,0	8	12				●	●	●	●	●	
50	37,0	9,0	36,0	8	12				●	●	●	●	●	●

other lengths on request

Ordering example:

see fold out page E65.

Precision Matrixes without shoulder, cylindrical , ISO 8977
Anti-rotation elements

anti-rotation element 1

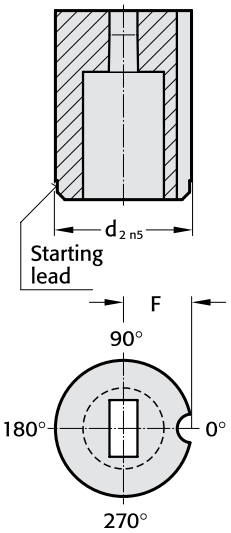

	Pin ∅3
d_2	F
10	5
13	6,5
16	8
20	10
22	11
25	12,5
32	16
40	20
50	25

anti-rotation element 2

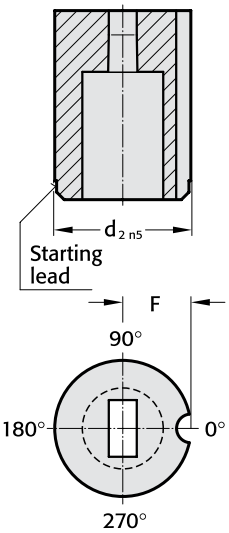

	Pin ∅4
d_2	F
10	6
13	7,2
16	8
20	10
22	11
25	12,5
32	16
40	20
50	25

anti-rotation element 3

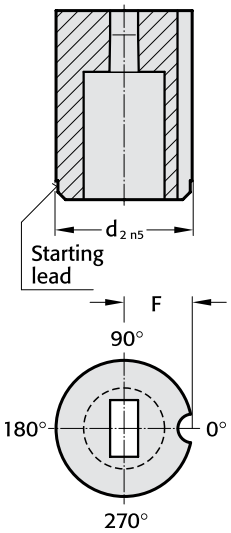

	Pin ∅6
d_2	F
10	7
13	8,2
16	9
20	11
22	12
25	13,5
32	16
40	20
50	25

anti-rotation element 4

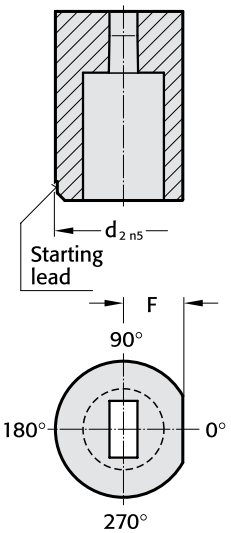

d_2	F
10	4
13	5,5
16	7
20	8,5
22	9,5
25	11
32	14
40	18
50	23

anti-rotation element 5

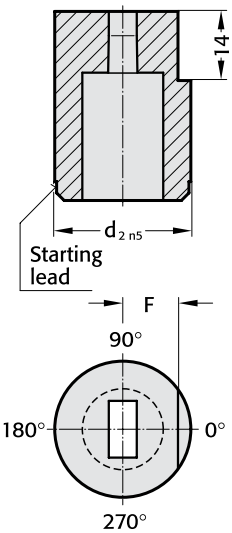

d_2	F
10	4
13	5,5
16	7
20	8,5
22	9,5
25	11
32	14
40	18
50	23

anti-rotation element 6

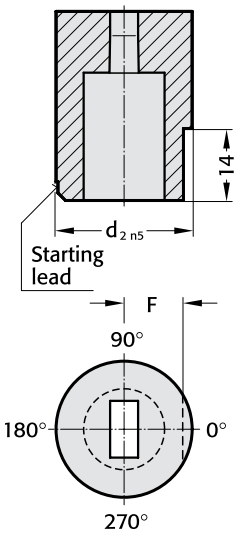

d_2	F
10	4
13	5,5
16	7
20	8,5
22	9,5
25	11
32	14
40	18
50	23

Ordering example:

see fold out page E65.

FIBRO

2607. 2617.
replaces 2613.

Precision Matrixes with shoulder, cylindrical ISO 8977

Material:
HSS
hardened: 62 ± 2 HRC

Execution:
Diameter d_2, and end faces ground.

Diameter P is a bored pilot hole for wire EDM.

2607.

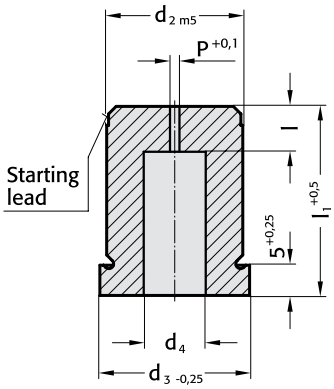

Material:
HSS
hardened: 62 ± 2 HRC

Execution:
Diameter d_2, and end faces ground.

2617.

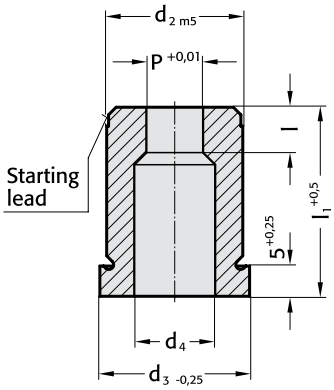

2607.

d_2	d_3	d_4	P	l	l_1 16	20	22	25	28	30	32	35
5	8	2,8	0,8	2	●	●	●	●	●	●	●	●
6	9	3,5	1,0	3	●	●	●	●	●	●	●	●
8	11	4,0	1,0	4	●	●	●	●	●	●	●	●
10	13	5,8	1,0	4	8	●	●	●	●	●	●	●	●
13	16	8,0	1,2	5	8		●	●	●	●	●	●	●
16	19	9,5	1,2	5	8		●	●	●	●	●	●	●
20	23	12,0	1,5	8	12		●	●	●	●	●	●	●
22	25	15,0	1,5	8	12		●	●	●	●	●	●	●
25	28	17,3	1,5	8	12		●	●	●	●	●	●	●
32	35	20,7	1,5	8	12		●	●	●	●	●	●	●
40	43	27,7	1,5	8	12		●	●	●	●	●	●	●
50	53	37,0	1,5	8	12		●	●	●	●	●	●	●

Other lengths on request.

Ordering example:
see fold out page E65.

2617.

d_2	d_3	d_4	P	l	l_1 16	20	22	25	28	30	32	35
5	8	2,8	1,0– 2,4	2	●	●	●	●	●	●	●	●
6	9	3,5	1,6– 3,0	3	●	●	●	●	●	●	●	●
8	11	4,0	2,0– 3,5	4	●	●	●	●	●	●	●	●
10	13	5,8	2,5– 5,0	4	8	●	●	●	●	●	●	●	●
13	16	8,0	4,0– 7,0	5	8		●	●	●	●	●	●	●
16	19	9,5	6,0– 9,0	5	8		●	●	●	●	●	●	●
20	23	12,0	8,0–11,0	8	12		●	●	●	●	●	●	●
22	25	15,0	9,0–14,0	8	12		●	●	●	●	●	●	●
25	28	17,3	10,7–16,0	8	12		●	●	●	●	●	●	●
32	35	20,7	15,0–20,0	8	12		●	●	●	●	●	●	●
40	43	27,7	19,0–27,0	8	12		●	●	●	●	●	●	●
50	53	37,0	26,0–36,0	8	12		●	●	●	●	●	●	●

Other lengths on request.

Ordering example:
see fold out page E65.

Precision Matrixes with shoulder, cylindrical ISO 8977

2627. 2637. 2647. 2657.

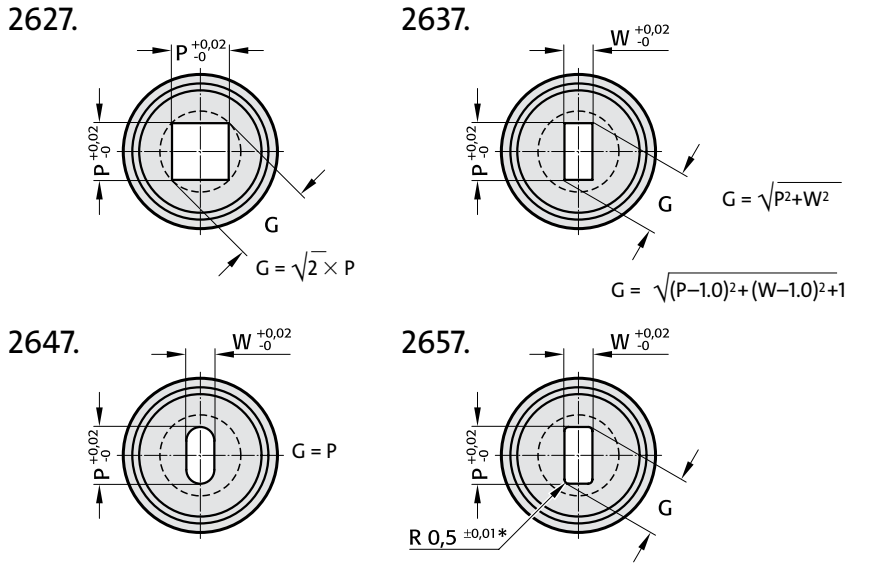

* For other radius options, see standardised special shapes, pages E 84 – E 85.

Material:

HSS
hardened: 62 ± 2 HRC

Execution:

Diameter d_2, and end faces ground.

Anti-rotation element, see page E 73

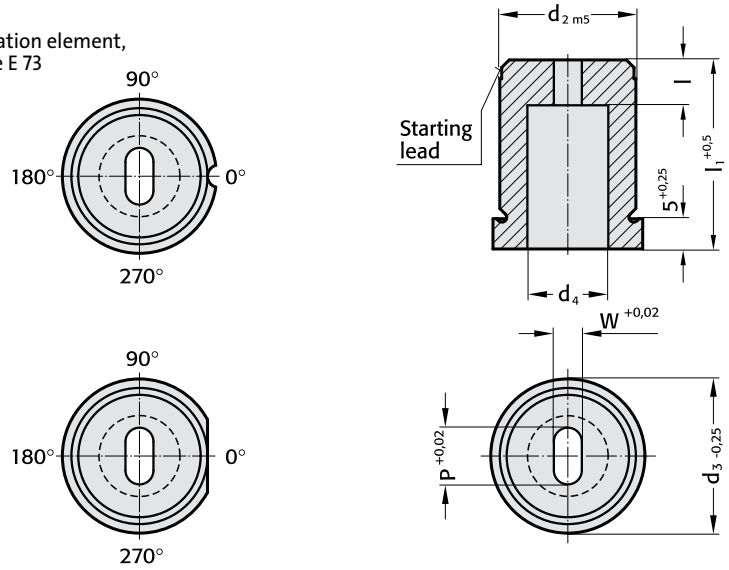

d_2	d_3	d_4	$W_{min.}$	$G_{max.}$	l	l_1 16	20	22	25	28	30	32	35
8	11	4,0	1,2	3,5	4	●	●	●	●	●	●	●	●
10	13	5,8	1,2	5,0	4 8	●	●	●	●	●	●	●	●
13	16	8,0	2,0	7,0	5 8		●	●	●	●	●	●	●
16	19	9,5	2,4	9,0	5 8		●	●	●	●	●	●	●
20	23	12,0	3,2	11,0	8 12		●	●	●	●	●	●	●
22	25	15,0	4,0	14,0	8 12		●	●	●	●	●	●	●
25	28	17,3	4,8	16,0	8 12		●	●	●	●	●	●	●
32	35	20,7	5,5	20,0	8 12		●	●	●	●	●	●	●
40	43	27,7	6,4	27,0	8 12		●	●	●	●	●	●	●
50	53	37,0	6,4	36,0	8 12		●	●	●	●	●	●	●

Other lengths on request.

Ordering example:

see fold out page E65.

Precision Matrixes with shoulder, cylindrical, ISO 8977 Anti-rotation elements

Anti-rotation element 1

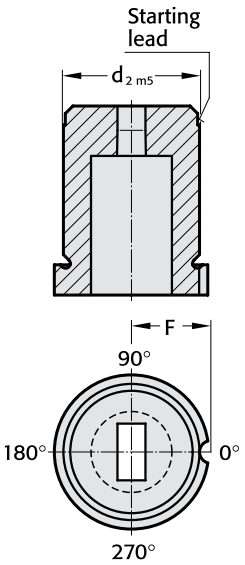

Pin ∅3	
d_2	F
8	5,5
10	6,5
13	8
16	9,5
20	11,5
22	12,5
25	14
32	17,5
40	21,5
50	26,5

Anti-rotation element 2

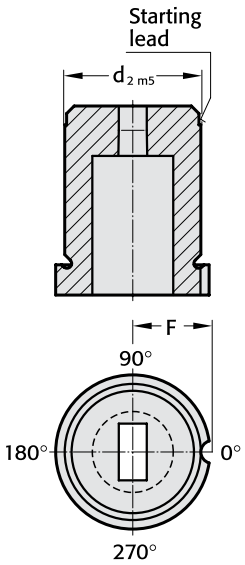

Pin ∅4	
d_2	F
8	6
10	7
13	8,5
16	10
20	12
22	13
25	14,5
32	18
40	22
50	27

Anti-rotation element 3

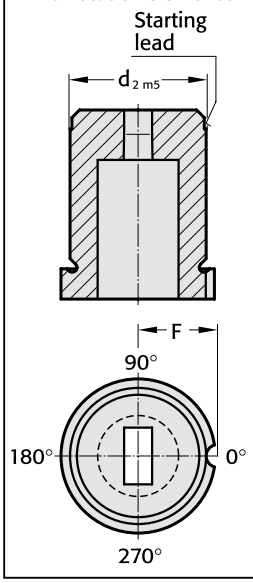

Pin ∅6	
d_2	F
8	7
10	8
13	9,5
16	11
20	13
22	14
25	15,5
32	19
40	23
50	28

Anti-rotation element 4

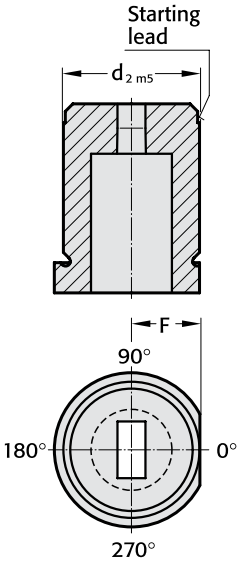

Ordering example:

see fold out page E65.

Matrixes without shoulder, automotive standard

2605.
2615.

2605.

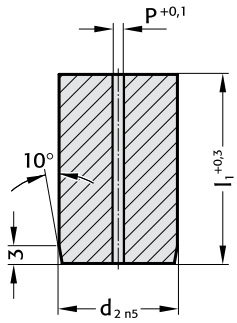

Material:

HSS
hardened: 62±2 HRC

Execution:

Diameter d_2, and end faces ground.

Diameter P is a bored pilot hole for wire EDM.

2615.

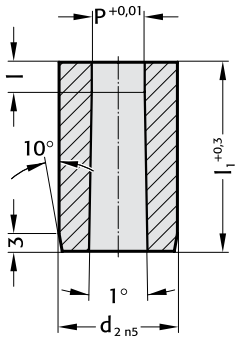

Material:

HSS
hardened: 62±2 HRC

Execution:

Diameter d_2, and end faces ground.

2605.

d_2	P	l_1 13	16	20	22	25	28	30	32	35	40
10	0,8	●	●	●	●	●	●	●	●	●	
13	0,8	●	●	●	●	●	●	●	●	●	
16	1,5			●	●	●	●	●	●	●	
20	2,4			●	●	●	●	●	●	●	
22	3,0			●	●	●	●	●	●	●	
25	3,0			●	●	●	●	●	●	●	
32	3,0			●	●	●	●	●	●	●	
38	3,0			●	●	●	●	●	●	●	●
40	3,0				●	●	●	●	●	●	●
45	3,0				●	●	●	●	●	●	●
50	3,0				●	●	●	●	●	●	●
56	3,0				●	●	●	●	●	●	●
63	3,0				●	●	●	●	●	●	●
71	3,0				●	●	●	●	●	●	●
76	3,0					●	●	●	●	●	●
86	3,0					●	●	●	●	●	●
90	3,0					●	●	●	●	●	●
100	3,0					●	●	●	●	●	●

Other lengths on request

Ordering example: see fold out page E65.

2615.

d_2	P	l		l_1 13	16	20	22	25	28	30	32	35	40
10	1,6 – 6,8	3	4 5	●	●	●	●	●	●	●	●	●	
13	3,0 – 8,8	3	5 8	●	●	●	●	●	●	●	●	●	
16	7,4 – 10,8	3	5 8			●	●	●	●	●	●	●	
20	9,5 – 13,6	3	5 10			●	●	●	●	●	●	●	
22	10,5 – 15,0	3	6 10			●	●	●	●	●	●	●	
25	12,0 – 17,0	3	6 10			●	●	●	●	●	●	●	
32	16,0 – 22,0	3	6 12			●	●	●	●	●	●	●	
38	18,0 – 27,0	3	8 12			●	●	●	●	●	●	●	●
40	18,0 – 27,0	3	8 12				●	●	●	●	●	●	●
45	18,0 – 35,0	3	8 12				●	●	●	●	●	●	●
50	18,0 – 40,0	3	8 12				●	●	●	●	●	●	●
56	18,0 – 45,0	3	8 12				●	●	●	●	●	●	●
63	18,0 – 50,0	3	8 12				●	●	●	●	●	●	●
71	18,0 – 56,0	3	8 12				●	●	●	●	●	●	●
76	25,0 – 60,0	3	8 12					●	●	●	●	●	●
86	25,0 – 66,0	3	8 12					●	●	●	●	●	●
90	32,0 – 70,0	3	8 12					●	●	●	●	●	●
100	32,0 – 78,0	3	8 12					●	●	●	●	●	●

Other lengths on request

Ordering example: see fold out page E65.

FIBRO

2625. 2635. 2645. 2655.

Matrixes without shoulder, automotive standard

2625.

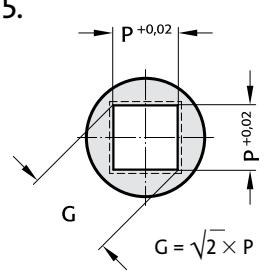

2635.

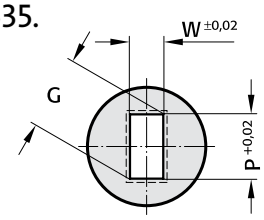

$G = \sqrt{P^2+W^2}$

$G = \sqrt{(P-1.0)^2+(W-1.0)^2+1}$

2645.

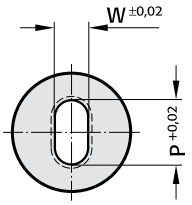

G = P

2655.

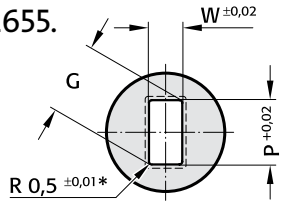

* For other radius options, see standardised special shapes, pages E 84 – E 85.

Anti-rotation element 3

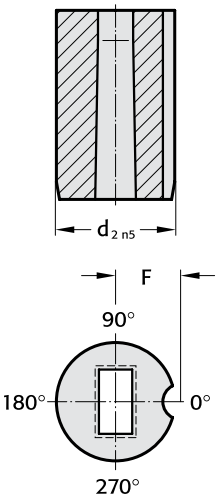

Pin ∅6	
d_2	F
10	7
13	8,2
16	9
20	11
22	12
25	13,5
32	16
38	19
40	20
45	22,5
50	25
56	28
63	31,5
71	35,5
76	38
85	42,5
90	45
100	50

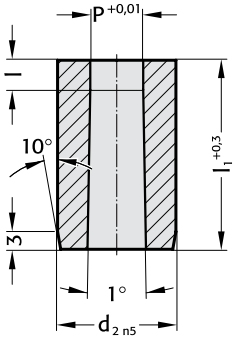

Material:

HSS
hardened: 62±2 HRC

Execution:

Diameter d_2, and end faces ground.

d_2	$W_{min.}$	$G_{max.}$	l			l_1 13	16	20	22	25	28	30	32	35	40
10	1,3 –	6,8	3	4	5	●	●	●	●	●	●	●	●	●	
13	1,9 –	8,8	3	5	8	●	●	●	●	●	●	●	●	●	
16	1,9 –	10,8	3	5	8			●	●	●	●	●	●	●	
20	1,9 –	13,6	3	5	10			●	●	●	●	●	●	●	
22	1,9 –	15,0	3	6	10			●	●	●	●	●	●	●	
25	1,9 –	17,0	3	6	10			●	●	●	●	●	●	●	
32	1,9 –	22,0	3	6	12			●	●	●	●	●	●	●	
38	1,9 –	27,0	3	8	12			●	●	●	●	●	●	●	●
40	1,9 –	27,0	3	8	12				●	●	●	●	●	●	●
45	2,4–	35,0	3	8	12				●	●	●	●	●	●	●
50	4,0 –	40,0	3	8	12				●	●	●	●	●	●	●
56	4,0 –	45,0	3	8	12				●	●	●	●	●	●	●
63	4,0 –	50,0	3	8	12				●	●	●	●	●	●	●
71	4,0 –	56,0	3	8	12				●	●	●	●	●	●	●
76	5,6 –	60,0	3	8	12					●	●	●	●	●	●
86	5,6 –	66,0	3	8	12					●	●	●	●	●	●
90	5,6 –	70,0	3	8	12					●	●	●	●	●	●
100	5,6 –	78,0	3	8	12					●	●	●	●	●	●

Other lengths on request

Ordering example: see fold out page E65.

Precision Guide Bushes for Punches
DIN 9845, Shape C
ISO 8978

FIBRO
262.
2621.

Material:

262.
Case hardened steel

Order No.	262.1.
Hardness	740 ± 40 HV 10

2621.
WS, hardened

Order No	2621.1.
Hardness	HRC 60 ± 2

Execution:

Diameters d_1, d_2 and starting lead ground.

Description of FIBRO materials for die components:
pages E 10 – E 11.

262. Shape C DIN 9845

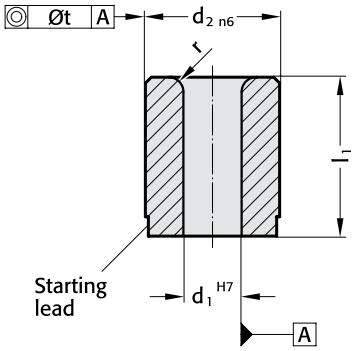

2621. ISO 8978

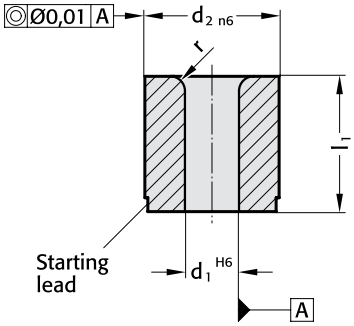

262.

d_1	Diameter steps	d_2	t	l_1	r
0,5 – 1,0	0,1	5	0,01	9	1
1,1 – 2,0		6		12	
2,1 – 3,0		7			
3,1 – 4,0		8			
4,1 – 5,0		10		16	
5,1 – 6,0		12	0,02		1,5
6,1 – 8,0		15		20	
8,1 – 10,0		18			2
10,1 – 12,0		22		28	
12,1 – 15,0		26			
15,1 – 18,0	0,5	30		36	

Other diameters on request.

Ordering Code (example):

Guide Bush for punches DIN 9845	= 262.
Material case hardened steel	= 1.
d_1 = Ø 2,4 mm	= 0240.
l_1 = 12 mm	= 012
Order No	= 262.1.0240.012

2621.

d_1	Diameter steps	d_2	l_1	r
1,0 – 2,4	0,1	5	8	1
1,6 – 3,0		6	12,5	1
2,0 – 3,5		8	12,5	1,5
3,0 – 5,0		10	16	2
4,0 – 7,2		13	16	2
6,0 – 8,8		16	20	2
7,5 – 11,3		20	20	2,5
11,0 – 16,6		25	25	2,5
15,0 – 20,0	0,5	32	25	4
18,0 – 27,0		40	32	4
26,0 – 36,0		50	40	4

Ordering Code (example):

Guide Bush for punches ISO 8978	= 2621.
Material WS	= 1.
d_1 = Ø 2,0 mm	= 0200.
d_2 = Ø 6 mm	= 0600
Order No	= 2621.1.0200.0600

FIBRO

260.
261.

Precision Matrixes with and without collar DIN 9845 Shape A, Shape B

Material:

HSS

Order No: Shape A = 260.3.
Shape B = 261.3.

Hardness: 62 ± 2 HRC

Description of FIBRO materials for die components: pages E 10–E 11.

260. Shape A

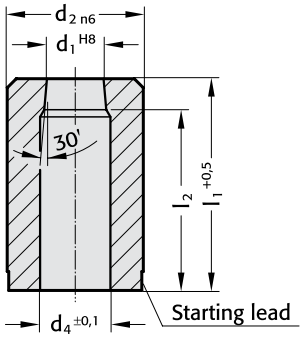

Execution:

Diameters d_1, d_2 and face surfaces ground.

261. Shape B

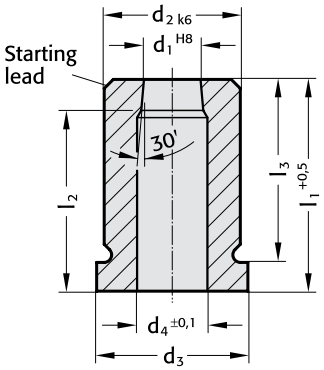

260.

d_1	Diameter steps	d_2	d_4	short l_1	short l_2	long l_1	long l_2
0,5– 1,0	0,1	5	d_1 +0,3	20	18	–	–
1,1– 2,0		6			17	28	25
2,1– 3,0		7	d_1 +0,5				
3,1– 4,0		8					
4,1 –5,0		10	d_1 +0,7		16		24
5,1– 6,0		12					
6,1– 8,0		15					
8,1–10,0		18	d_1 +1				
10,1–12,0		22			15		23
12,1–15,0		26					
15,1–18,0		30		–	–		

Other diameters on request.

261.

d_1	Diameter steps	d_2	d_3	d_4	short l_1	short l_2	short l_3	long l_1	long l_2	long l_3
0,5– 1,0	0,1	5	7	d_1 +0,3	20	18	16	–	–	–
1,1– 2,0		6	8			17		28	25	24
2,1– 3,0		7	9	d_1 +0,5						
3,1– 4,0		8	10							
4,1 –5,0		10	12	d_1 +0,7			16		24	
5,1– 6,0		12	14							
6,1– 8,0		15	17							
8,1–10,0		18	20	d_1 +1						
10,1–12,0		22	24			15			23	
12,1–15,0		26	28							
15,1–18,0		30	32		–	–	–			

Ordering Code (example):

Matrix	= 261.
Material HSS	= 3.
d_1 = Ø 2,20 mm	= 0220.
l_1 = 28 mm	= 028
Order No	= 261.3.0220.028

Precision Matrixes with and without collar cylindrical

FIBRO

2602.
2612.

2602.

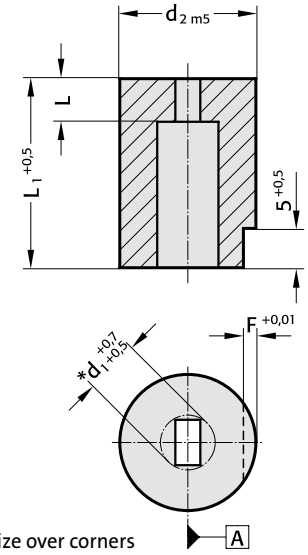

*d_1 = size over corners

Classified Shape

With starting holes for wire-EDM as per 2601. page E 79

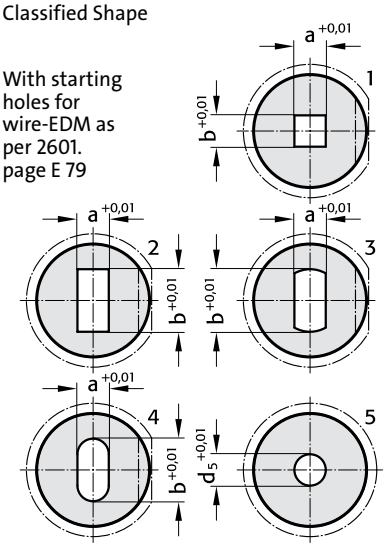

2612.

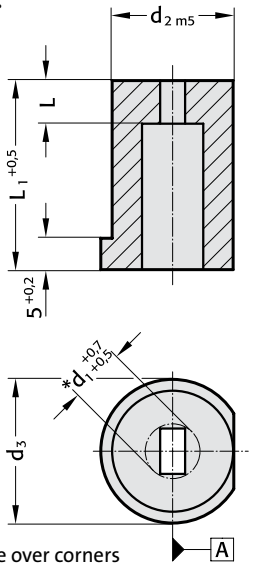

*d_1 = size over corners

Material:

HSS
Order No.: 2602. o. 2612.3.
Hardness: 64±2 HRC

Execution:

Diameters d_2 and face surfaces ground.

Key flats parallel with A unless otherwise specified.

2602.

Size over corners d_1, d_5	d_2	L	F	L_1 16	19	22	25	28	32
1,8 – 3,2	8	3	1,0	●	●	●	●	●	●
2,0 – 5,0	10			●	●	●	●	●	●
3,0 – 7,0	13		1,5	●	●	●	●	●	●
5,0 – 8,0	16	5		●	●	●	●	●	●
7,0 – 11,0	20			●	●	●	●	●	●
11,0 – 16,0	25		2,5	●	●	●	●	●	●
16,0 – 19,0	32	7		●	●	●	●	●	●
19,0 – 28,0	40			●	●	●	●	●	●

Ordering code (example):

Matrix	= 2602.
Material HSS	= 3.
d_2 = 16 mm	= 016.
L_1 = 32 mm	= 032.
Shape 2	= 2.
a = 3,96 mm	= 0396.
b = 5,16 mm	= 0516
Order No	= 2602.3.016.032.2.0396.0516

2612.

Size over corners d_1, d_5	d_2	d_3	L	L_1 16	19	22	25	28	32
1,8 – 3,2	8	11	3	●	●	●	●	●	●
2,0 – 5,0	10	13		●	●	●	●	●	●
3,0 – 7,0	13	16		●	●	●	●	●	●
5,0 – 8,0	16	19	5	●	●	●	●	●	●
7,0 – 11,0	20	23		●	●	●	●	●	●
11,0 – 16,0	25	28		●	●	●	●	●	●
16,0 – 19,0	32	35	7	●	●	●	●	●	●
19,0 – 28,0	40	43		●	●	●	●	●	●

Ordering code (example):

Matrix	= 2612.
Material HSS	= 3.
d_2 = 16 mm	= 016.
L_1 = 28 mm	= 028.
Shape 2	= 2.
a = 3,96 mm	= 0396.
b = 5,16 mm	= 0516
Order No	= 2612.3.016.028.2.0396.0516

FIBRO

2601.
2611.

Precision Matrixes with and without collar conical

Classified shapes

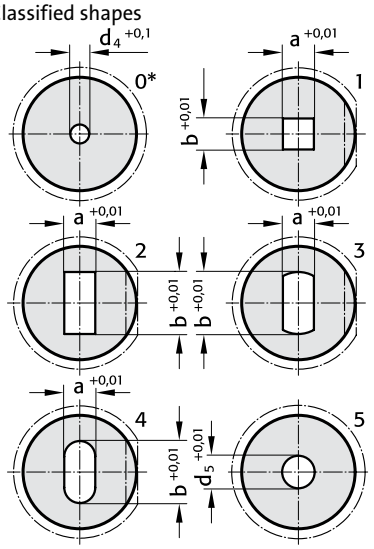

* Shape 0 = with starting hole for wire cut

2601.

*d1 = size over corners

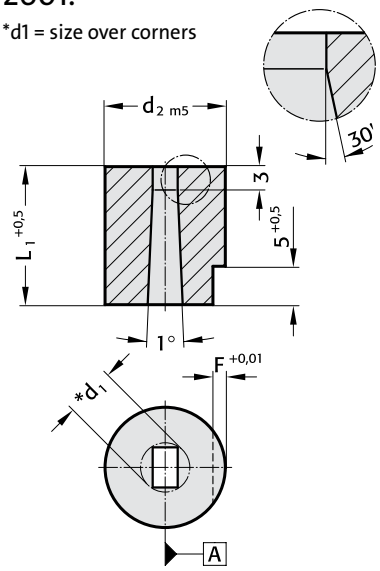

Material:

HS
Order No.: 2601. o. 2611.3.
Hardness: 64 ± 2 HRC

Execution:

Diameters d_2 precision ground; face surfaces ground.

Key flats parallel with A unless otherwise specified.

2611.

*d_1 = size over corners

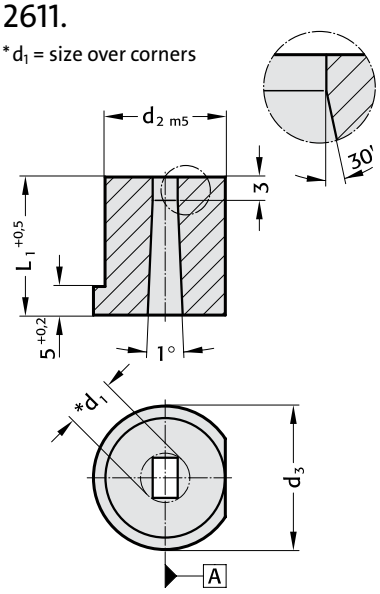

2601.

Size over corners d_1, d_5	d_2	d_4	F	L_1 16	19	22	25	28	32
1,8– 3,2	8	1,0	1,0	●	●	●	●	●	●
2,0– 5,0	10			●	●	●	●	●	●
3,0– 7,0	13	1,5	1,5	●	●	●	●	●	●
5,0– 8,0	16			●	●	●	●	●	●
7,0–11,0	20			●	●	●	●	●	●
11,0–16,0	25	2,5	2,5	●	●	●	●	●	●
16,0–19,0	32			●	●	●	●	●	●
19,0–28,0	40			●	●	●	●	●	●

Ordering Code (example):

Matrix	= 2601.
Material HSS	= 3.
d_2 = 16 mm	= 016.
L_1 = 32 mm	= 032.
Shape 2	= 2.
a = 3,96 mm	= 0396.
b = 5,16 mm	= 0516
Order No	= 2601.3.016.032.2.0396.0516

2611.

Size over corners d_1, d_5	d_2	d_3	d_4	L_1 16	19	22	25	28	32
1,8– 3,2	8	11	1,0	●	●	●	●	●	●
2,0– 5,0	10	13		●	●	●	●	●	●
3,0– 7,0	13	16	1,5	●	●	●	●	●	●
5,0– 8,0	16	19		●	●	●	●	●	●
7,0–11,0	20	23		●	●	●	●	●	●
11,0–16,0	25	28	2,5	●	●	●	●	●	●
16,0–19,0	32	35		●	●	●	●	●	●
19,0–28,0	40	43		●	●	●	●	●	●

Ordering Code (example):

Matrix	= 2611.
Material HSS	= 3.
d_2 = 16 mm	= 016.
L_1 = 32 mm	= 032.
Shape 2	= 2.
a = 3,96 mm	= 0396.
b = 5,16 mm	= 0516
Order No	= 2611.3.016.032.2.0396.0516

Standardised Special Shapes

Ordering examples
Special shapes
Punches/Cutting bushes

2 2 9 2 . _____ . F 2 4 . . .

NB:
All the parameters must be given for special shapes!

Special shape F 24

Punch:
22 without ejector pin

Special shape

You will find diameters and lengths on the pages of punches you have selected.

Type:	Order No
ISO 8020	= 1
ball-lock, light duty	= 2
ball-lock, heavy duty	= 3
ball-lock, larger cutting edge,light duty	= 4
ball-lock, larger cutting edge, heavy duty	= 5

View Punch

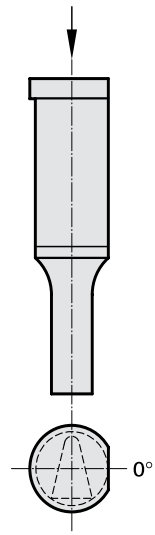

2 6 9 5 . _____ . F 2 4 . . .

NB:
All the parameters must be given for special shapes!

Special shape F 24

Matrixes

Special shape

You will find diameters and lengths on the pages of cutting bushes you have selected.

Type:	Order No
automotive	= 5
without shoulder ISO 8977	= 6
with shoulder ISO 8977	= 7

View Matrix

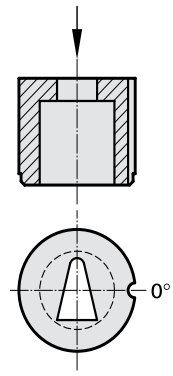

Standardised special shapes

90°

Round, flattened

F10

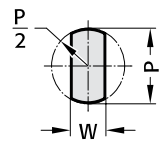

F11

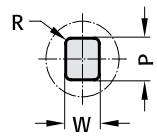

Key-hole shapes

F13

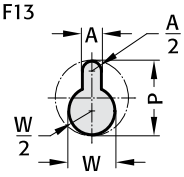

F53

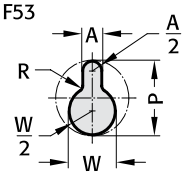

F54

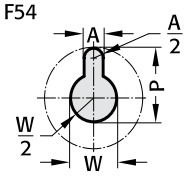

F55

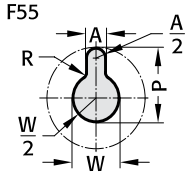

F33

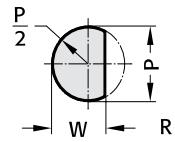

F52

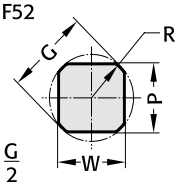

$R = \frac{G}{2}$

F14

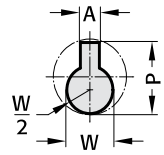

F56

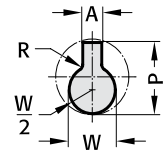

F57

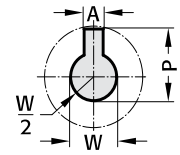

F58

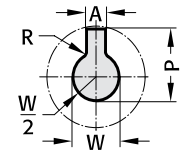

Various

F41

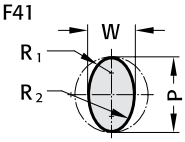

$R_1 = 0{,}683W - 0{,}183P$
$R_2 = 1{,}183P - 0{,}683W$

F93

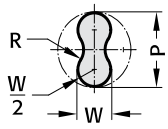

F64

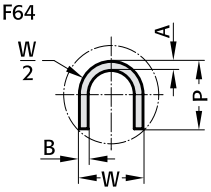

F65

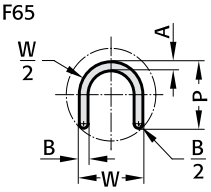

F27

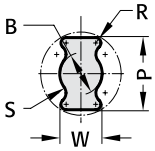

F28

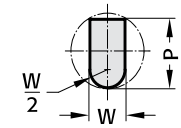

F29

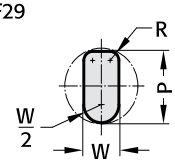

F16

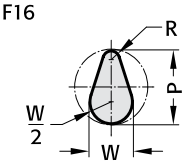

F34

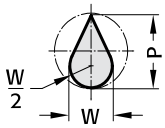

180° ## Triangles, trapezes **0°**

F22

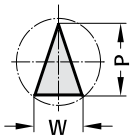

F23

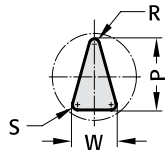

F24

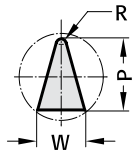

F25

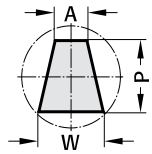

F26

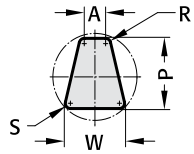

Key-hole

F30

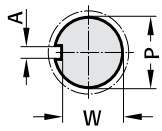

F31

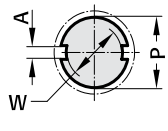

F32

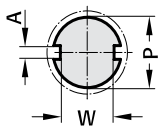

F61

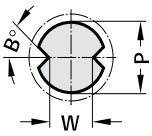

F62

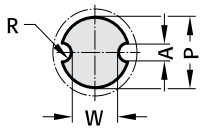

Polygons

F12

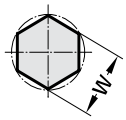

F85

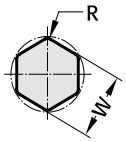

F35

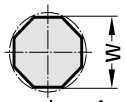

A = number of straight edges

F86

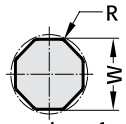

A = number of straight edges

F36

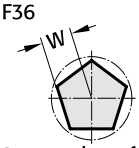

A = number of non-straight edges

F87

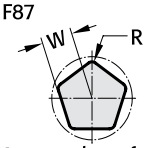

A = number of non-straight edges

F88

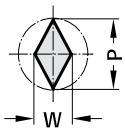

F89

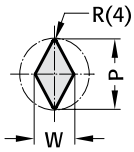

F37

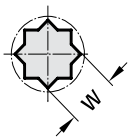

F38

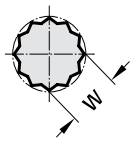

F39

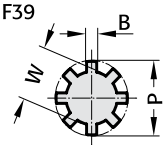

A = number of teeth (only 3, 4, 6 or 8)

F90

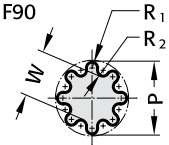

A = number of teeth (only 3, 4, 6 or 8)

270°

90°

Multi key-hole shapes

F19

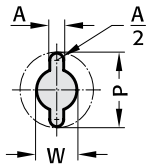

F59

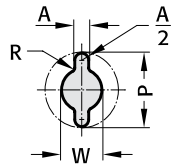

F20

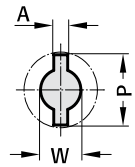

F60

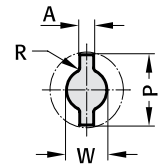

F17

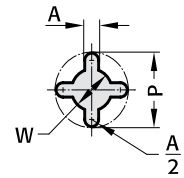

F18

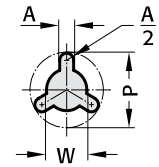

Double T-shapes

F21

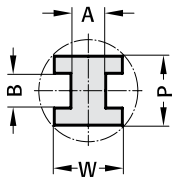

F91

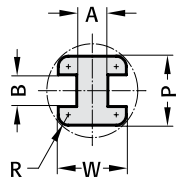

F92

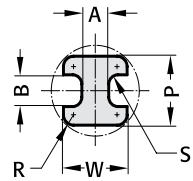

F15

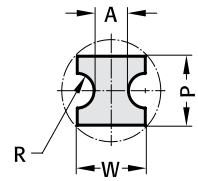

Simple T-shapes

F44

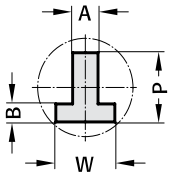

F66

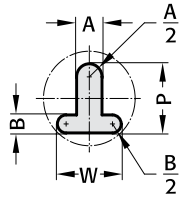

F45

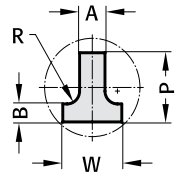

F67

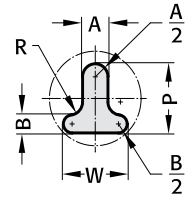

L-shapes

180°

F46

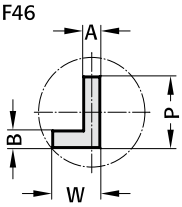

F77

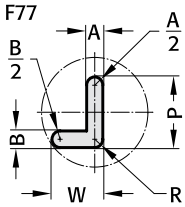

F78

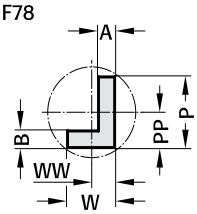

F79

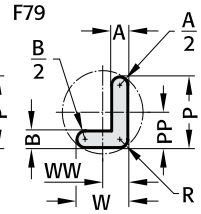

F48

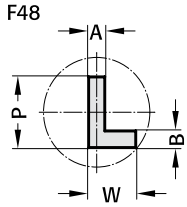

F80

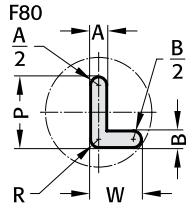

0°

F81

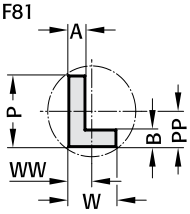

F82

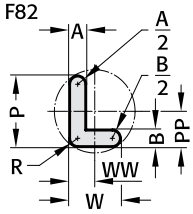

F47

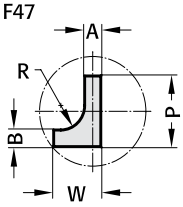

F83

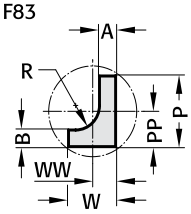

F49

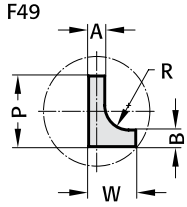

F84

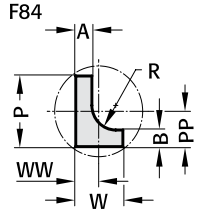

U-shapes

F50

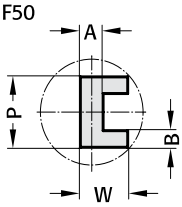

F68

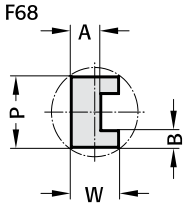

F69

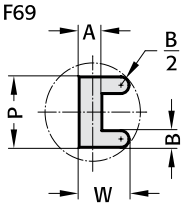

F70

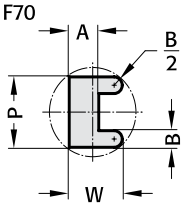

F71

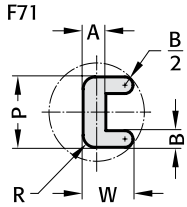

F72

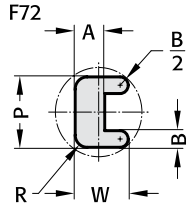

F51

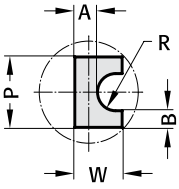

F73

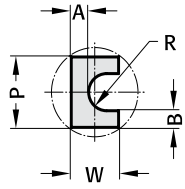

F74

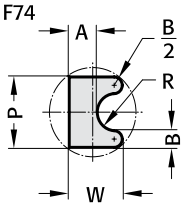

F75

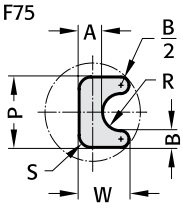

F76

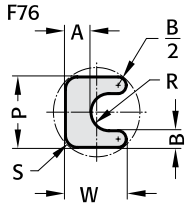

270°

Ordering Code (example)
Matrixes for Dynamic Stripper (DAE)

Note: See table for standard dimensions

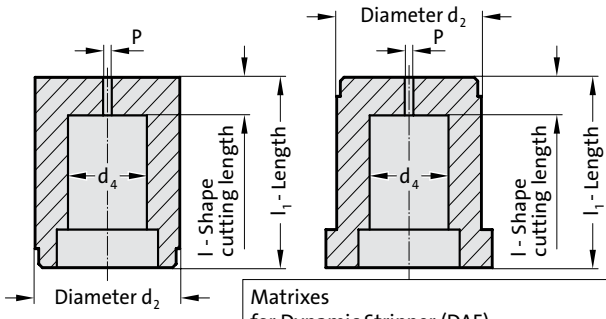

2 6 1 8 . 0 6 . 6 E 4 . 0 9

Matrixes for Dynamic Stripper (DAE)

Version	Order No
blank (pilot hole bore)	= 0

Type	Order No
without collar for Dynamic Stripper (DAE)	= 6
with collar for Dynamic Stripper (DAE)	= 7

Diameter d_2	Order No
13	= 5
16	= 6
20	= 7

Length l_1	Order Code character
25	= E

Shape cutting length l	Order No
5	= 4

d_4 = 9 mm

Ordering Code (example):

2618.06.6E4.09

d_4 = 9 mm	(09)
Shape cutting length: l = 5 mm	(4)
Length: l_1 = 25 mm	(E)
Diameter d_2 = 16 mm	(6)
Type = without collar for Dynamic Stripper (DAE)	(6)
Version: Blank (start bore hole)	(0)
Matrix for Dynamic Stripper (DAE)	(2618)

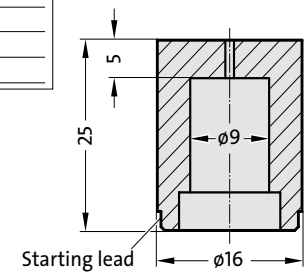

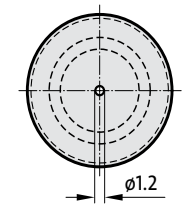

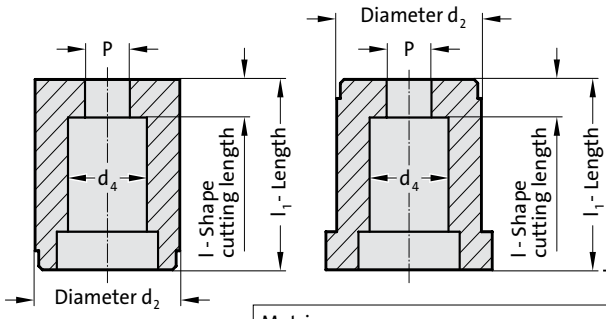

2 6 1 8 . 1 6 . 6 E 4 . 0 4 3 1

Matrixes for Dynamic Stripper (DAE)

Version	Order No
Round	= 1

Type	Order No
without collar for Dynamic Stripper (DAE)	= 6
with collar for Dynamic Stripper (DAE)	= 7

Diameter d_2	Order No
13	= 5
16	= 6
20	= 7

Length l_1	Order Code character
25	= E

Shape cutting length l	Order No
5	= 4

Shape: Round P = 4.31 mm

Ordering Code (example):

2618.16.6E4.0431

Shape: Round P = 4.31 mm	(0431)
Shape cutting length: l = 5 mm	(4)
Length: l1 = 25 mm	(E)
Diameter d2 = 16 mm	(6)
Type = without collar for Dynamic Stripper (DAE)	(6)
Version: Round	(1)
Matrix for Dynamic Stripper (DAE)	(2618)

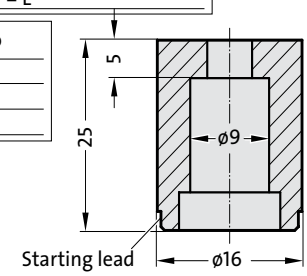

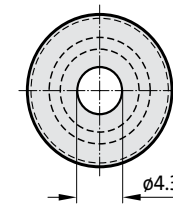

Patent pending

FIBRO

Dynamic Stripper (DAE) 2618.

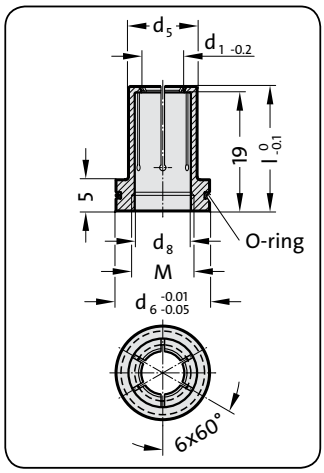

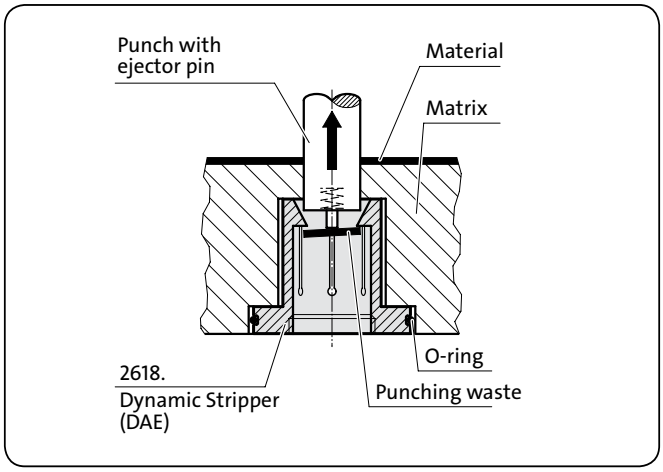

Mounting Example:

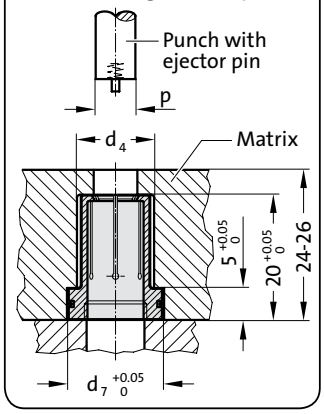

Mounting Example:

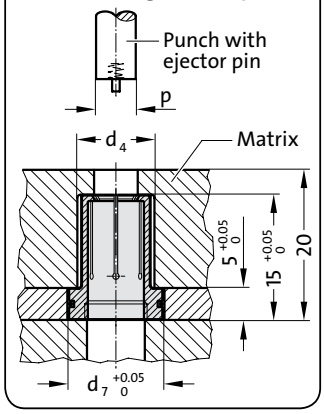

Material: Steel, hardened

Description:

The Dynamic Stripper is used in blanking tools for punching operations using material up to 2 mm thick. The Stripper is below the die. It is similar in shape to a segmented chuck. After the punching operation the punch enters the Stripper with the punch waste still attached.
The Dynamic Stripper opens up to receive the punch. On the return stroke the Dynamic Stripper strips the punch waste from the punch.
The stripping element diameter is manufactured 0.2 mm smaller than the diameter P of the punch. To ensure reliable stripping the minimum entry depth into the Dynamic Stripper must be no less than 1 mm.
The Dynamic Stripper can help to protect both the tool and the product from damage and also accelerate the production rate.

2618.

Cutting punch „P“ Gradation 0.01	Stripper „d_1“ (Order ø)	d_5	d_6	l	M	Matrix d_4	d_7
3.00 - 3.09	3.0	7	11	19.95	M6	8	11
3.10 - 3.19	3.1						
3.20 - 3.29	3.2						
3.30 - 3.39	3.3						
3.40 - 3.49	3.4						
3.50 - 3.59	3.5						
3.60 - 3.69	3.6						
3.70 - 3.79	3.7						
3.80 - 3.89	3.8						
3.90 - 3.99	3.9						
4.00 - 4.09	4.0						
4.10 - 4.19	4.1	8	12	19.95	M8	9	12
4.20 - 4.29	4.2						
4.30 - 4.39	4.3						
4.40 - 4.49	4.4						
4.50 - 4.59	4.5						
4.60 - 4.69	4.6						
4.70 - 4.79	4.7						
4.80 - 4.89	4.8						
4.90 - 4.99	4.9						
5.00 - 5.09	5.0						
5.10 - 5.19	5.1	9	13	19.95	M8	10	13
5.20 - 5.29	5.2						
5.30 - 5.39	5.3						
5.40 - 5.49	5.4						
5.50 - 5.59	5.5						
5.60 - 5.69	5.6						
5.70 - 5.79	5.7						
5.80 - 5.89	5.8						
5.90 - 5.99	5.9						
6.00 - 6.09	6.0						
6.10 - 6.19	6.1	10	14	19.95	M10	11	14
6.20 - 6.29	6.2						
6.30 - 6.39	6.3						
6.40 - 6.49	6.4						
6.50 - 6.59	6.5						
6.60 - 6.69	6.6						
6.70 - 6.79	6.7						
6.80 - 6.89	6.8						
6.90 - 6.99	6.9						
7.00 - 7.09	7.0						
7.10 - 7.19	7.1	11	15	19.95	M10	12	15
7.20 - 7.29	7.2						
7.30 - 7.39	7.3						
7.40 - 7.49	7.4						
7.50 - 7.59	7.5						
7.60 - 7.69	7.6						
7.70 - 7.79	7.7						
7.80 - 7.80	7.8						
7.90 - 7.99	7.9						
8.00 - 8.09	8.0						

Ordering Code (example):

Dynamic Stripper (DAE)	= 2618.
d_5 = ∅ 7 mm	= 07.
l = 19.95 mm	= 020.
d_1 = 3.0 mm	= 0300
Order No	= 2618.07.020.0300

FIBRO **Patent pending**

2618.06.
2618.16.

Matrixes without collar for Dynamic Stripper (DAE)

2618.06.

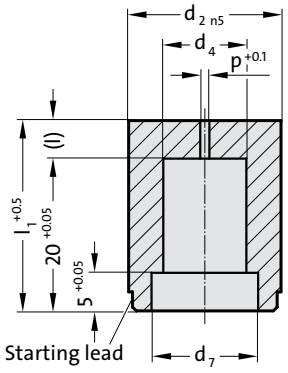

2618.06. with pilot hole bore

d_2	d_4	d_7	P	l	l_1
13	8	11	1.2	5	25
16	9	12	1.2	5	25
16	10	13	1.5	5	25
20	11	14	1.5	5	25
20	12	15	1.5	5	25

Material:

HSS
hardened: 62±2HRC

Execution:

Diameter d_2, starting lead and end faces ground.
Diameter P is a bored pilot hole for wire EDM.

Ordering Code (example):

see fold-out page E87

2618.16.

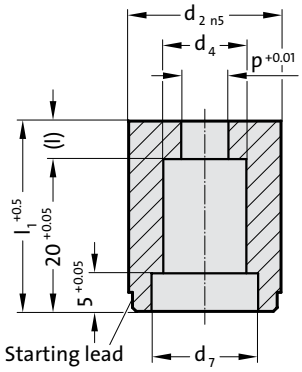

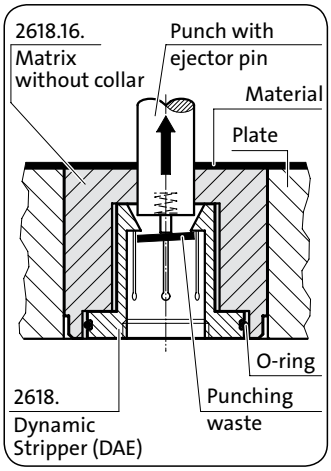

Mounting Example:

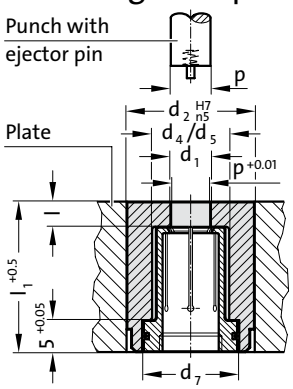

2618.16.

d_2	d_4	d_7	l	l_1	Matrix Gradation 0.01 P	DAE d_5	d_1 Gradation 0.1
13	8	11	5	25	3.00 - 4.29	7	3.0 - 4.0
16	9	12	5	25	4.30 - 5.29	8	4.1 - 5.0
16	10	13	5	25	5.30 - 6.29	9	5.1 - 6.0
20	11	14	5	25	6.30 - 7.29	10	6.1 - 7.0
20	12	15	5	25	7.30 - 8.29	11	7.1 - 8.0

Material:

Steel (HSS), hardened

Execution:

Diameter d_2, starting lead and end faces ground.

Note:

Order Dynamic Stripper (DAE) separately

Ordering Code (example):

see fold-out page E87

Patent pending

Matrixes with collar for Dynamic Stripper (DAE)

FIBRO

2618.07.
2618.17.

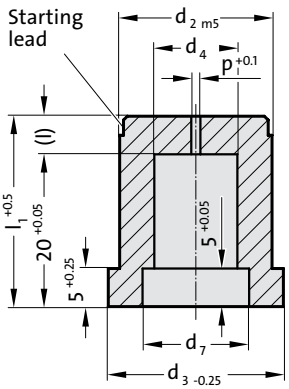

Material:

HSS
hardened: 62±2HRC

Execution:

Diameter d_2, starting lead and end faces ground.
Diameter P is a bored pilot hole for wire EDM.

Ordering Code (example):

see fold-out page E87

2618.07. with pilot hole bore

d2	d3	d4	d7	P	l	l1
13	16	8	11	1.2	5	25
16	19	9	12	1.2	5	25
16	19	10	13	1.5	5	25
20	23	11	14	1.5	5	25
20	23	12	15	1.5	5	25

2618.17.

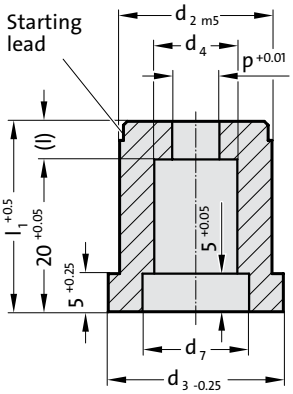

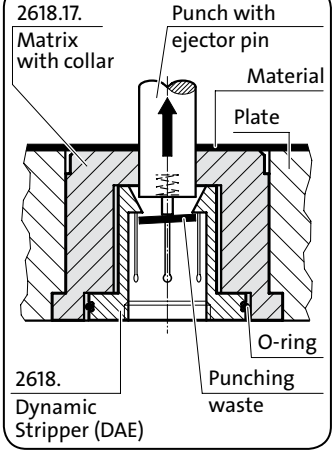

Mounting Example:

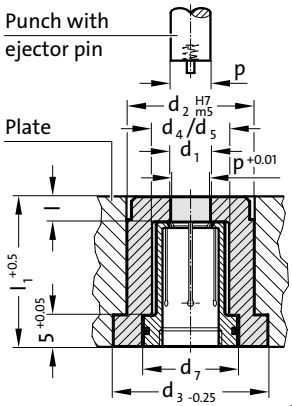

Material:

Steel (HSS), hardened

Execution:

Diameter d2, starting lead and end faces ground.

Note:

Order Dynamic Stripper (DAE) separately

Ordering Code (example):

see fold-out page E87

2618.17.

d2	d3	d4	d7	l	l1	Matrix Gradation 0.01 P	DAE d5	d1 Gradation 0.1
13	16	8	11	5	25	3.00 - 4.29	7	3.0 - 4.0
16	19	9	12	5	25	4.30 - 5.29	8	4.1 - 5.0
16	19	10	13	5	25	5.30 - 6.29	9	5.1 - 6.0
20	23	11	14	5	25	6.30 - 7.29	10	6.1 - 7.0
20	23	12	15	5	25	7.30 - 8.29	11	7.1 - 8.0

Precision Retainers for Ball-Lock Punches

Triangle Precision Retainers
for Ball-Lock Punches, light duty
for Ball-Lock Punches, heavy duty

FIBRO

2664.05.
2664.06.

2664.05.

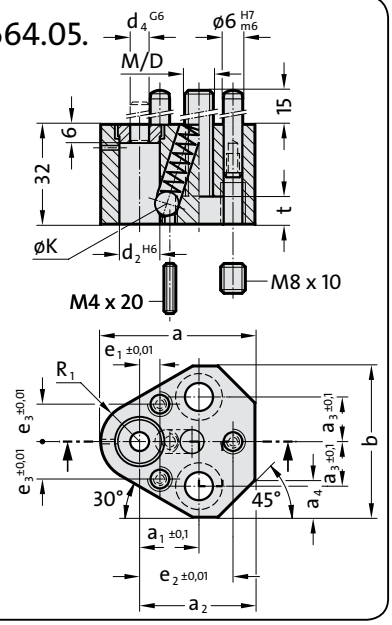

Execution:

Version for metal thicknesses <3 mm.

The punch locating hole d_2 is manufactured to a tolerance of ±0.01 mm relative to the 6 stud holes H7. This ensures the interchangeability of the locating plate with other polygon versions.

Note:

Special punch retainers available to order.

2664.06.

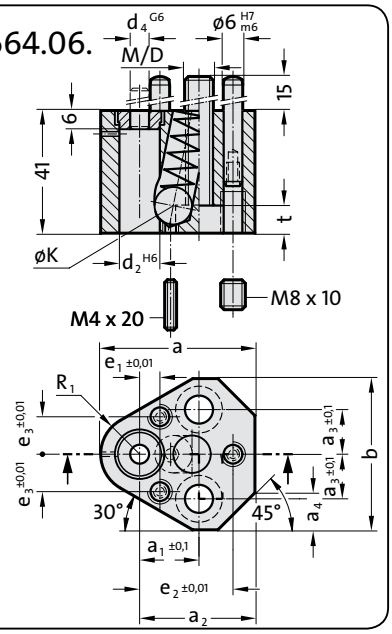

Execution:

Version for metal thicknesses >3 mm.

The punch locating hole d_2 is manufactured to a tolerance of ±0.01 mm relative to the 6 stud holes H7. This ensures the interchangeability of the locating plate with other polygon versions.

Note:

Special punch retainers available to order.

2664.05.

d_2	10	13	16	20	25	32	38
d_4	6	6	6	6	6	6	6
M/D	8/9	8/9	8/9	10/11	12/13,5	12/13,5	12/13,5
a	43,5	49,5	52,5	59	68,5	68,5	76
a_1	19,05	19,05	19,05	19,05	23,82	23,82	27
a_2	34	37	38,5	42	46,5	46,5	50
a_3	11,12	14,27	15,87	17,47	19,84	19,84	24
a_4	10	12	13	14	16	16	18
b	41	48,5	51,5	56,5	64,5	64,5	72,5
e_1	7,5	6,5	6	5	7	7	10
e_2	26,92	29,97	31,75	33,53	40,64	40,64	43,99
e_3	9	12	13,5	16,5	22	22	26
∅K	8	8	8	8	8	8	8
t	9	9	9	11	13	13	13
R_1	9,5	12,5	14	17	22	22	26

Ordering example:

Triangle retainer	= 2664.
for ball-lock punch, light duty	= 05.
d_2 = Ø 13 mm	= 13
Order number	= 2664.05.13

2664.06.

d_2	10	13	16	20	25	32	40
d_4	6	6	6	6	6	6	6
M/D	8/9	8/9	8/9	10/11	12/13,5	12/13,5	12/13,5
a	43,5	49,5	52,5	59	68,5	68,5	76
a_1	19,05	19,05	19,05	19,05	23,82	23,82	27
a_2	34	37	38,5	42	46,5	46,5	50
a_3	11,12	14,27	15,87	17,47	19,84	19,84	24
a_4	10	12	13	14	16	16	18
b	41	48,5	51,5	56,5	64,5	64,5	72,5
e_1	7,5	6,5	6	5	7	7	10
e_2	26,92	29,97	31,75	33,53	40,64	40,64	43,99
e_3	9	12	13,5	16,5	22	22	26
∅K	10	12	12	12	12	12	12
t	9	9	9	11	13	13	13
R_1	9,5	12,5	14	17	22	22	26

Ordering example:

Triangle retainer	= 2664.
for ball-lock punch, heavy duty	= 06.
d_2 = Ø 13 mm	= 13
Order number	= 2664.06.13

FIBRO

2664.07. Triangle Precision Retainers for Ball-Lock Punches, light duty
2664.10. for Ball-Lock Punches, heavy duty

Execution:

Version for metal thicknesses <3 mm.

The punch locating hole d_2 is manufactured to a tolerance of ±0.01 mm relative to the 6 stud holes H7. This ensures the interchangeability of the locating plate with other polygon versions.

Note:

Special punch retainers available to order.

2664.07.

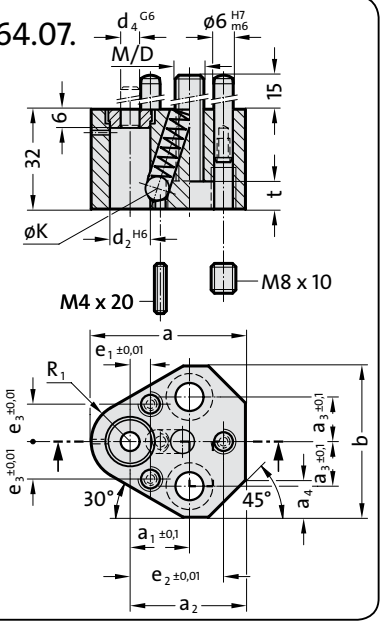

Execution:

Version for metal thicknesses >3 mm.

The punch locating hole d_2 is manufactured to a tolerance of ±0.01 mm relative to the 6 stud holes H7. This ensures the interchangeability of the locating plate with other polygon versions.

Note:

Special punch retainers available to order.

2664.10.

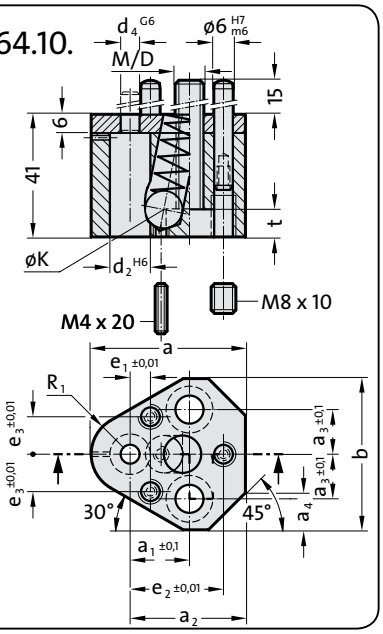

2664.07.

d_2	6
d_4	3
M/D	6/6,6
a	35
a_1	19,05
a_2	27
a_3	11,12
a_4	6
b	37,5
e_1	9,0
e_2	23
e_3	8
∅K	6
t	7
R_1	8

Ordering example:

Triangle retainer	= 2664.
light duty	= 07.
d_2 = Ø 6 mm	= 06
Order number	= 2664.07.06

2664.10.

d_2	10	13	16	20	25	32	40
d_4	6	6	6	6	6	6	6
M/D	8/9	8/9	8/9	10/11	12/13,5	12/13,5	12/13,5
a	43,5	49,5	52,5	59	68,5	68,5	76
a_1	19,05	19,05	19,05	19,05	23,82	23,82	27
a_2	34	37	38,5	42	46,5	46,5	50
a_3	11,12	14,27	15,87	17,47	19,84	19,84	24
a_4	10	12	13	14	16	16	18
b	41	48,5	51,5	56,5	64,5	64,5	72,5
e_1	7,5	6,5	6	5	7	7	10
e_2	26,92	29,97	31,75	33,53	40,64	40,64	43,99
e_3	9	12	13,5	16,5	22	22	26
∅K	10	12	12	12	12	12	12
t	9	9	9	11	13	13	13
R_1	9,5	12,5	14	17	22	22	26

Ordering example:

Triangle retainer	= 2664.
heavy duty	= 10.
d_2 = Ø 13 mm	= 13
Order number	= 2664.10.13

Triangle Precision Retainers
for Ball-Lock Punches, light duty
for Ball-Lock Punches, heavy duty

FIBRO

2664.08.
2664.09.

2664.08.

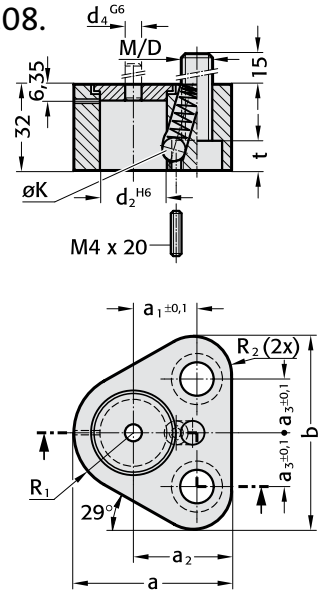

2664.09.

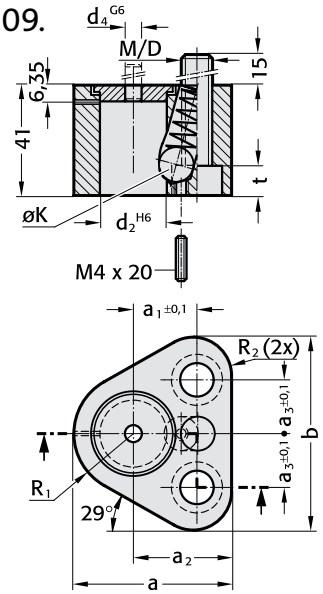

2664.08.

d_2	10	13	16	20	25	32
d_4	6	6	6	6	6	6
M/D	8	8	8	10	12	12
a	38,5	41,7	43,3	47,5	59,2	59,2
a_1	19,05	19,05	19,05	19,05	23,82	23,82
a_2	29	29	29	30	37	37
a_3	11,12	14,27	15,87	17,47	19,84	19,84
b	40,61	47,93	51,59	57,93	70,85	70,85
∅K	8	8	8	8	8	8
t	9	9	9	11	13	13
R_1	9,5	12,7	14,3	17,5	22,2	22,2
R_2	9,5	9,5	9,5	11	15	15

Ordering example:

Triangle retainer for ball-lock punch	= 2664.
light duty	= 08.
d_2 = ∅ 20 mm	= 20
Order No	= 2664.08.20

2664.09.

d_2	10	13	16	20	25	32
d_4	6	6	6	6	6	6
M/D	8	8	8	10	12	12
a	38,5	41,7	43,3	47,5	59,2	59,2
a_1	19,05	19,05	19,05	19,05	23,82	23,82
a_2	29	29	29	30	37	37
a_3	11,12	14,27	15,87	17,47	19,84	19,84
b	40,61	47,93	51,59	57,93	70,85	70,85
∅K	10	12	12	12	12	12
t	9	9	9	11	13	13
R_1	9,5	12,7	14,3	17,5	22,2	22,2
R_2	9,5	9,5	9,5	11	15	15

Ordering example:

Triangle retainer for ball-lock punch	= 2664.
heavy duty	= 09.
d_2 = ∅ 20 mm	= 20
Order No	= 2664.09.20

Accessories for Precision Retainers, triangular, for Ball-Lock Punches

		2192.10.	236.1.	2666.04.	2192.72.	2666.06.	2666.01.	2666.03.	2192.72.
		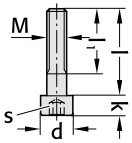	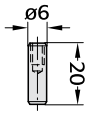		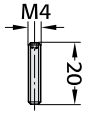		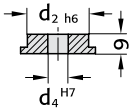	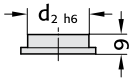	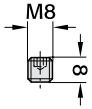
Retainer	∅ d_2	Socket head cap screw	Dowel pin	Ball	Ball release pin	Spring	Pressure disk for centring pin	Pressure Disc	Pin screw
2664.05.	10	2192.10.08.035	236.1.0600.020	2666.04.008	2192.72.04.020	2666.06.008	2666.01.10	2666.03.10	2192.72.08.008
	13	2192.10.08.035	236.1.0600.020	2666.04.008	2192.72.04.020	2666.06.008	2666.01.13	2666.03.13	2192.72.08.008
	16	2192.10.08.035	236.1.0600.020	2666.04.008	2192.72.04.020	2666.06.008	2666.01.16	2666.03.16	2192.72.08.008
	20	2192.10.10.035	236.1.0600.020	2666.04.008	2192.72.04.020	2666.06.008	2666.01.20	2666.03.20	2192.72.08.008
	25	2192.10.12.035	236.1.0600.020	2666.04.008	2192.72.04.020	2666.06.008	2666.01.25	2666.03.25	2192.72.08.008
	32	2192.10.12.035	236.1.0600.020	2666.04.008	2192.72.04.020	2666.06.008	2666.01.32	2666.03.32	2192.72.08.008
	38	2192.10.12.035	236.1.0600.020	2666.04.008	2192.72.04.020	2666.06.008	2666.01.38	2666.03.38	2192.72.08.008
2664.06./10.	10	2192.10.08.040	236.1.0600.020	2666.04.010	2192.72.04.020	2666.06.010	2666.01.10	2666.03.10	2192.72.08.008
	13	2192.10.08.040	236.1.0600.020	2666.04.012	2192.72.04.020	2666.06.012	2666.01.13	2666.03.13	2192.72.08.008
	16	2192.10.08.040	236.1.0600.020	2666.04.012	2192.72.04.020	2666.06.012	2666.01.16	2666.03.16	2192.72.08.008
	20	2192.10.10.050	236.1.0600.020	2666.04.012	2192.72.04.020	2666.06.012	2666.01.20	2666.03.20	2192.72.08.008
	25	2192.10.12.050	236.1.0600.020	2666.04.012	2192.72.04.020	2666.06.012	2666.01.25	2666.03.25	2192.72.08.008
	32	2192.10.12.050	236.1.0600.020	2666.04.012	2192.72.04.020	2666.06.012	2666.01.32	2666.03.32	2192.72.08.008
	40	2192.10.12.050	236.1.0600.020	2666.04.012	2192.72.04.020	2666.06.012	2666.01.40	2666.03.38	2192.72.08.008
2664.07.	6	2192.10.06.035	236.1.0600.020	2666.04.006	2192.72.04.020	2666.06.006	2666.01.06	2666.03.06	2192.72.08.008
2664.08.	10	2192.10.08.035	236.1.0600.020	2666.04.008	2192.72.04.020	2666.06.008	2666.01.10	2666.03.10	2192.72.08.008
	13	2192.10.08.035	236.1.0600.020	2666.04.008	2192.72.04.020	2666.06.008	2666.01.13	2666.03.13	2192.72.08.008
	16	2192.10.08.035	236.1.0600.020	2666.04.008	2192.72.04.020	2666.06.008	2666.01.16	2666.03.16	2192.72.08.008
	20	2192.10.10.035	236.1.0600.020	2666.04.008	2192.72.04.020	2666.06.008	2666.01.20	2666.03.20	2192.72.08.008
	25	2192.10.12.035	236.1.0600.020	2666.04.008	2192.72.04.020	2666.06.008	2666.01.25	2666.03.25	2192.72.08.008
	32	2192.10.12.035	236.1.0600.020	2666.04.008	2192.72.04.020	2666.06.008	2666.01.32	2666.03.32	2192.72.08.008
2664.09.	10	2192.10.08.040	236.1.0600.020	2666.04.010	2192.72.04.020	2666.06.010	2666.01.10	2666.03.10	2192.72.08.008
	13	2192.10.08.040	236.1.0600.020	2666.04.012	2192.72.04.020	2666.06.012	2666.01.13	2666.03.13	2192.72.08.008
	16	2192.10.08.040	236.1.0600.020	2666.04.012	2192.72.04.020	2666.06.012	2666.01.16	2666.03.16	2192.72.08.008
	20	2192.10.10.040	236.1.0600.020	2666.04.012	2192.72.04.020	2666.06.012	2666.01.20	2666.03.20	2192.72.08.008
	25	2192.10.12.040	236.1.0600.020	2666.04.012	2192.72.04.020	2666.06.012	2666.01.25	2666.03.25	2192.72.08.008
	32	2192.10.12.040	236.1.0600.020	2666.04.012	2192.72.04.020	2666.06.012	2666.01.32	2666.03.32	2192.72.08.008

Ball release tool	Hook shape	straight	straight with threaded tip
	2666.05.01	2666.05.02	2666.05.03
	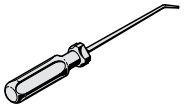	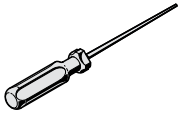	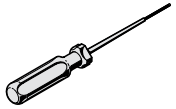

Square Precision Retainers for Ball-Lock Punches, light duty

2661.07.
2661.08.

2661.07.

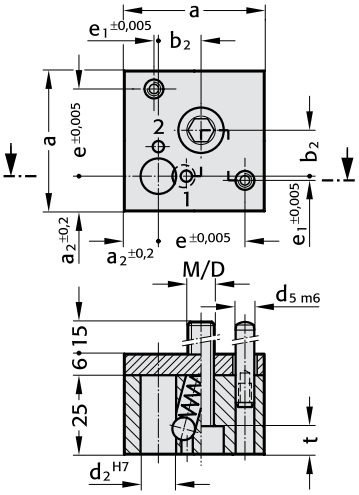

Execution:

The centres of the pinholes d_5 are the reference points for the position of the punch bore.
The dimensions e and e1 have a tolerance of ±0,005 mm.
The square ball-lock retainers are interchangeable.
The order must specify position 1 or 2 for the locking ball.
Ball channel horizontal = 1
Ball channel vertical = 2

Note:

Supplied with dowel pins and screws DIN EN ISO 4762.

2661.08.

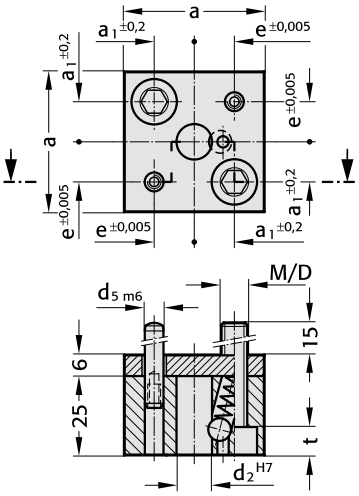

Execution:

The centres of the pinholes d_5 are the reference points for the position of the punch bore.
The e-dimensions have a tolerance of ± 0,005 mm.
The square ball-lock retainers are interchangeable.

Note:

Supplied with dowel pins and screws DIN EN ISO 4762.

2661.07.

d_2	d_5	M/D	a	a_2	b_2	e	e_1	t
10	8	8/9	45	11	15	28	1	9
13								
16								
20	10	10/11	56	17	18	32	5	11
25								

Ordering code (example):

Square Retainer	= 2661.
for Ball-Lock Punch	= 07.
d_2 = Ø 20 mm	= 20.
Vertical ball race	= 2
Order No	= 2661.07.20.2

2661.08.

d_2	d_5	M/D	a	a_1, e	t
6	8	8/9	45	13	9
10					
13					
16					
20	10	10/11	56	16	11
25		12/13,5	63	20	13

Ordering code (example):

Square Retainer	= 2661.
for Ball-Lock Punch	= 08.
d_2 = Ø 20 mm	= 20.
Vertical ball race	= 2
Order No	= 2661.08.20.2

2662.05.

Rectangular Precision Retainers, for Ball-Lock Punches, light duty

Material:

Punch plate case-hardened 740± 40 HV 10
Pressure plate hardened 60 +2 HRC

Execution:

The centres of the pin holes d_5 are the reference points for the position of the punch bore.
The dimensions e, e_1 and e_2 have a tolerance of ± 0,005 mm.
The rectangular ball-lock retainers are interchangeable.

Note:

Supplied with dowel pins and screws DIN EN ISO 4762.

2662.05.

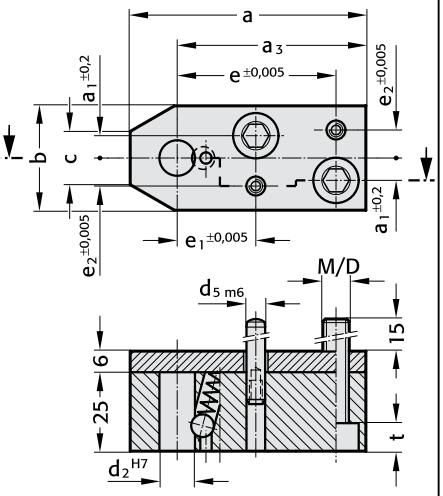

2662.05.

d_2	d_5	M/D	a	a_3	a_1	b	e	e_1	e_2	c	t
6	8	8/9	75	60	7	32	50	25	9	16	9
10											
13											
16											
20	10	10/11	85	63	9	40	53	28	11	20	11
25											

Ordering code (example):

Rectangular Retainer	= 2662.
for Ball-Lock Punch	= 05.
d_2 = Ø 20 mm	= 20
Order No	= 2662.05.20

ACCU-LOCK Fixture Device for Ball-Lock Punches
light duty 2668.2.
heavy duty 2668.3.

FIBRO

2668.2./2668.3.

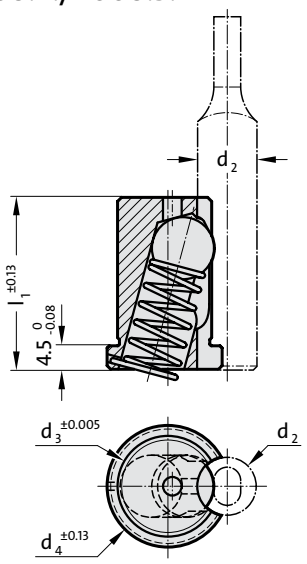

2668.2.

Order code	Cutting punch-∅ "d_2"	d_3	d_4	l_1
2668.2.06	6	12	14.6	25.7
2668.2.10	10	14	16.6	25.7
2668.2.13	13	14	16.6	25.7
2668.2.16	16	14	16.6	25.7
2668.2.20	20	16	18.6	25.7
2668.2.25	25	16	18.6	25.7
2668.2.32	32	16	18.6	25.7
2668.2.38	38	16	18.6	25.7

2666.05.02
Ball release tool, straight

2668.3.

Order code	Cutting punch-∅ "d_2"	d_3	d_4	l_1
2668.3.10	10	16	19.6	34.7
2668.3.13	13	20	24.6	34.7
2668.3.16	16	20	24.6	34.7
2668.3.20	20	20	24.6	34.7
2668.3.25	25	20	24.6	34.7
2668.3.32	32	20	24.6	34.7
2668.3.40	40	20	24.6	34.7

2666.05.02
Ball release tool, straight

Typical Application:

Mounting Example:

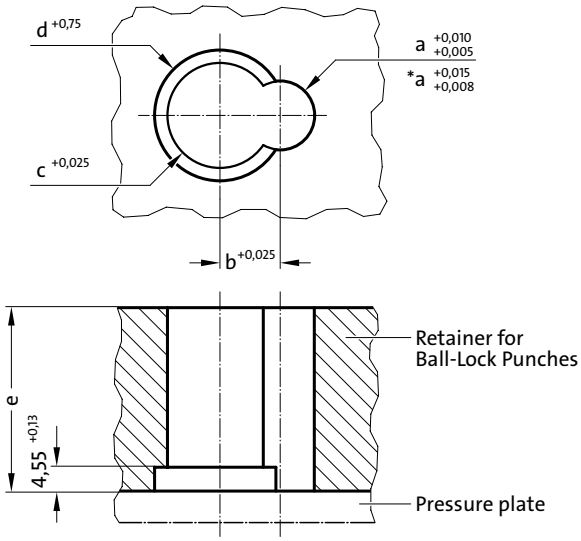

Mounting dimensions for 2668.2. / 2668.3.

Order-No.	a	b	c	d	e
2668.2.06	6	6.5	12.013	15.0	25.7
2668.2.10	10	9.0	14.013	17.0	25.7
2668.2.13	13	10.5	14.013	17.0	25.7
2668.2.16	16	12.0	14.013	17.0	25.7
2668.2.20	20	14.0	16.013	19.0	25.7
2668.2.25	25	16.5	16.013	19.0	25.7
2668.2.32	*32	20.0	16.013	19.0	25.7
2668.2.38	*38	23.0	16.013	19.0	25.7
2668.3.10	10	10.0	16.013	20.0	34.7
2668.3.13	13	11.5	20.013	25.0	34.7
2668.3.16	16	13.0	20.013	25.0	34.7
2668.3.20	20	15.0	20.013	25.0	34.7
2668.3.25	25	17.5	20.013	25.0	34.7
2668.3.32	*32	21.0	20.013	25.0	34.7
2668.3.40	*40	25.0	20.013	25.0	34.7

Precision Retainers
ISO

Triangle Precision Retainers, for round Punches, ISO 8020 for Profile Punches, ISO 8020

FIBRO

2664.02.
2664.04.

2664.02.

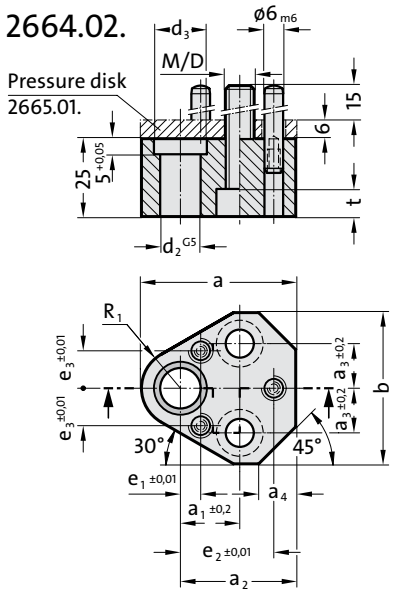

Execution:

The centres of the pinholes d_5 are the reference points for the position of the punch bore.
The dimensions e_1, e_2 and e_3 have a tolerance of ± 0.01 mm.
The triangle retainers are interchangeable.

Note:

Pressure plate 2665.01 to be ordered separately for the receiving punch plate.

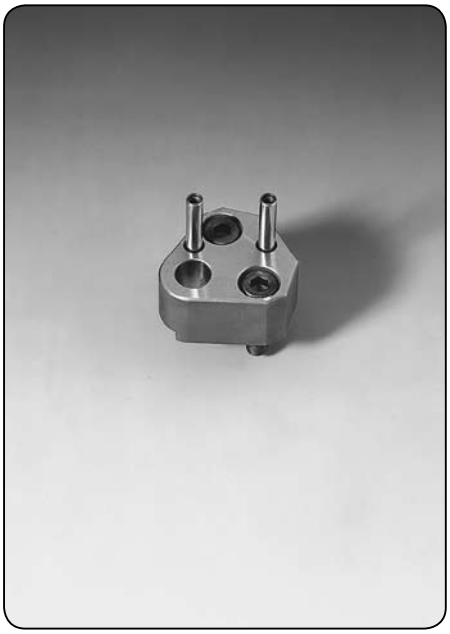

2664.04.

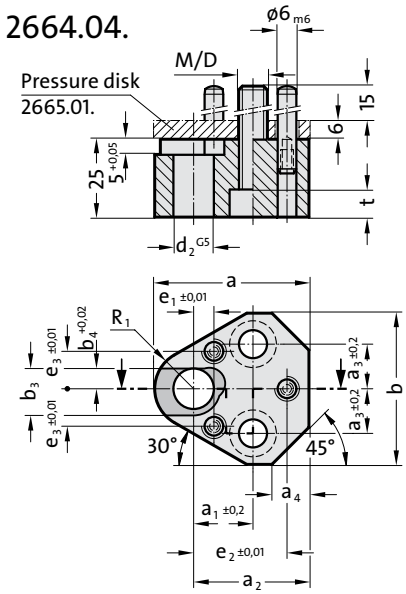

Execution:

The centres of the pinholes d_5 are the reference points for the position of the punch bore.
The dimensions e_1, e_2 and e_3 have a tolerance of ± 0.01 mm.
The triangle retainers are interchangeable.

Note:

Pressure plate 2665.01 to be ordered separately for the receiving punch plate.

2664.02.

d_2	10	13	16	20	25	32
d_3	14	17	20	24	29	36
M/D	8/9	8/9	8/9	10/11	12/13,5	12/13,5
a	43,5	49,5	52,5	59	68,5	68,5
a_1	19,05	19,05	19,05	19,05	23,82	23,82
a_2	34	37	38,5	42	46,5	46,5
a_3	11,12	14,27	15,87	17,47	19,84	19,84
a_4	10	12	13	14	16	16
b	41,0	48,5	51,5	56,5	64,5	64,5
e_1	7,5	6,5	6	5	7	7
e_2	26,92	29,97	31,75	33,53	40,64	40,64
e_3	9	12	13,5	16,5	22	22
t	9	9	9	11	13	13
R_1	9,5	12,5	14	17	22	22

Ordering example:

Triangle retainer	= 2664.
for round Punch, ISO 8020	= 02.
d_2 = ∅ 13 mm	= 13
Order number	= 2664.02.13

2664.04.

d_2	10	13	16	20	25	32
M/D	8/9	8/9	8/9	10/11	12/13,5	12/13,5
a	43,5	49,5	52,5	59	68,5	68,5
a_1	19,05	19,05	19,05	19,05	23,82	23,82
a_2	34	37	38,5	42	46,5	46,5
a_3	11,12	14,27	15,87	17,47	19,84	19,84
a_4	10	12	13	14	16	16
b	41,0	48,5	51,5	56,5	64,5	64,5
b_3	12	15	18	23	28	35
b_4	5	6,5	8	10	12,5	16
e_1	7,5	6,5	6	5	7	7
e_2	26,92	29,97	31,75	33,53	40,64	40,64
e_3	9	12	13,5	16,5	22	22
t	9	9	9	11	13	13
R_1	9,5	12,5	14	17	22	22

Ordering example:

Triangle retainer	= 2664.
for Profile Punch, ISO 8020	= 04.
d_2 = ∅13 mm	= 13
Order number	= 2664.04.13

Accessories for Precision Retainers, triangular, for Punches, to ISO 8020

2192.10.

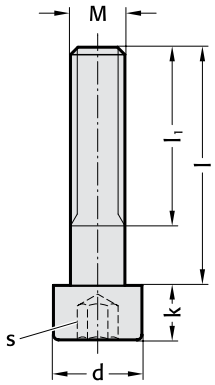

236.1.

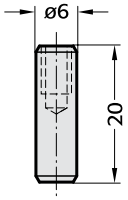

2192.72.

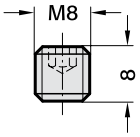

2665.01.

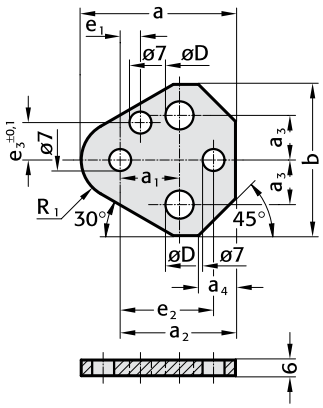

Retainer	Ø d_2	Socket head cap screw	Dowel pin	Pin screw	Pressure plate
2664.02./04.	10	2192.10.08.035	236.1.0600.020	2192.72.08.008	2665.01.10
	13	2192.10.08.035	236.1.0600.020	2192.72.08.008	2665.01.13
	16	2192.10.08.035	236.1.0600.020	2192.72.08.008	2665.01.16
	20	2192.10.10.035	236.1.0600.020	2192.72.08.008	2665.01.20
	25	2192.10.12.035	236.1.0600.020	2192.72.08.008	2665.01.25
	32	2192.10.12.035	236.1.0600.020	2192.72.08.008	2665.01.32

Square Precision Retainers for Punches to ISO 8020

2661.01. 2661.02.

2661.01.

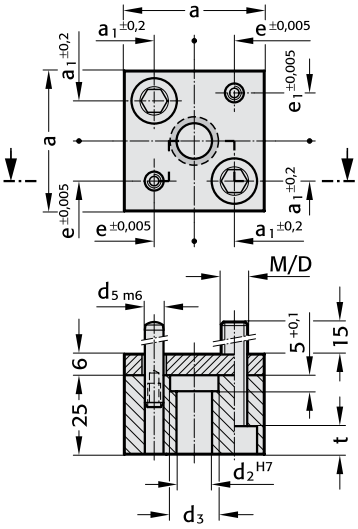

Execution:

The centres of the pinholes d_5 are the reference points for the position of the punch bore.
The dimensions e and e_1 have a tolerance of ± 0,005 mm.
The square retainers are interchangeable.

Note:

Supplied with dowel pins and screws DIN EN ISO 4762.

2661.02.

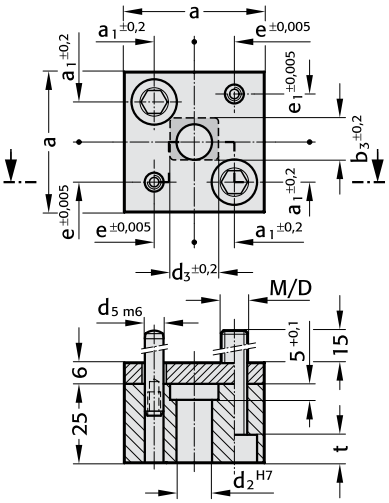

Execution:

The centres of the pinholes d_5 are the reference points for the position of the punch bore.
The dimensions e and e_1 have a tolerance of ± 0,005 mm.
The square retainers are interchangeable.

Note:

Supplied with dowel pins and screws DIN EN ISO 4762.

2661.01.

d_2	d_3	d_5	M/D	a	a_1, e	e_1	t
6	10	8	8/9	45	13	15,5	9
8	12						
10	14						
13	17						
16	20						
20	25	10	10/11	56	16	19	11
25	30		12/13,5	63	20	22,5	13

Ordering code (example):

Square Retainer	= 2661.
for punch to ISO 8020	= 01.
d_2 = ∅ 13 mm	= 13
Order No	= 2661.01.13

2661.02.

d_2	d_3	d_5	M/D	a	a_1, e	e_1	b_3	t
6	10	8	8/9	45	13	15,5	8	9
8	12						10	
10	14						12	
13	17						15	
16	20						18	
20	25	10	10/11	56	16	19	22,5	11
25	30		12/13,5	63	20	22,5	27,5	13

Ordering code (example):

Square Retainer	= 2661.
for punch to ISO 8020	= 02.
d_2 = ∅ 20 mm	= 20
Order No	= 2661.02.20

FIBRO

2662.01.
2662.02.

Rectangular Precision Retainers for Punches to ISO 8020

Execution:

The centres of the pinholes d_5 are the reference points for the position of the punch bore.
The dimensions b, e_1 and e_2 have a tolerance of ± 0,005 mm.
The rectangular retainers are interchangeable.

Note:

Supplied with dowel pins and screws DIN EN ISO 4762.

2662.01.

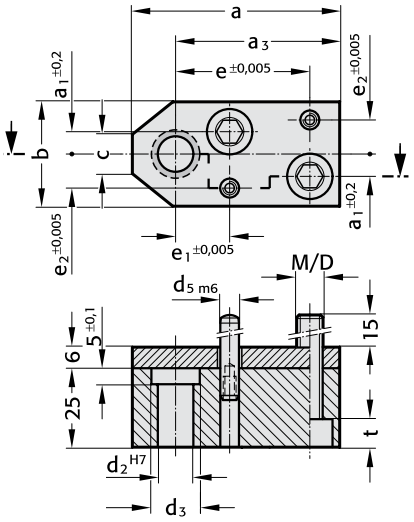

Execution:

The centres of the pinholes d_5 are the reference points for the position of the punch bore.
The dimensions e, e_1 and e_2 have a tolerance of ± 0,005 mm.
The rectangular retainers are interchangeable.

Note:

Supplied with dowel pins and screws DIN EN ISO 4762.

2662.02.

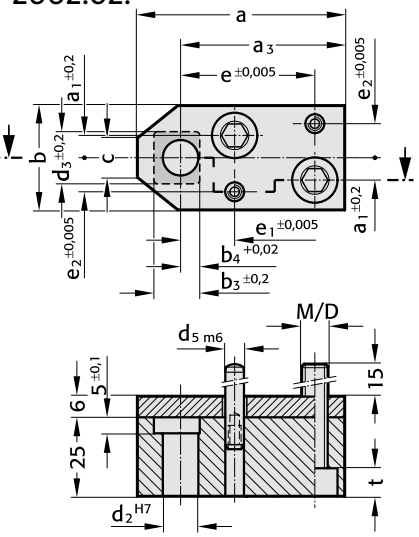

2662.01.

d_2	d_3	d_5	M/D	a	a_1	a_3	b	e	e_1	e_2	c	t
6	10	8	8/9	60	7	50	32	40	15	9	11	9
8	12											
10	14											
13	17			67		53		43	18		16	
16	20											
20	25	10	10/11	80	9	60	40	50	25	11	22	11
25	30											

Ordering code (example):

Rectangular Retainer	= 2662.
for Punch to ISO 8020	= 01.
d_2 = ∅ 13 mm	= 13
Order No	= 2662.01.13

2662.02.

d_2	d_3	d_5	M/D	a	a_1	a_3	b	b_3	b_4	e	e_1	e_2	c	t
6	10	8	8/9	60	7	50	32	8	3	40	15	9	11	9
8	12							10	4					
10	14							12	5					
13	17			67		53		15	6,5	43	18		16	
16	20							18	8					
20	25	10	10/11	80	9	60	40	22,5	10	50	25	11	22	11
25	30							27,5	12,5					

Ordering code (example):

Rectangular Retainer	= 2662.
for Punch to ISO 8020	= 02.
d_2 = ∅ 20 mm	= 20
Order No	= 2662.02.20

Precision Retainers
VDI

Square Precision Retainers for round Punches to VDI 3374

2661.03.
2661.04.

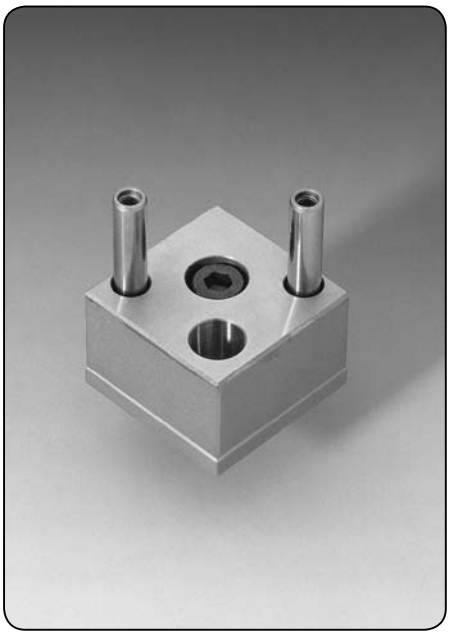

2661.03.

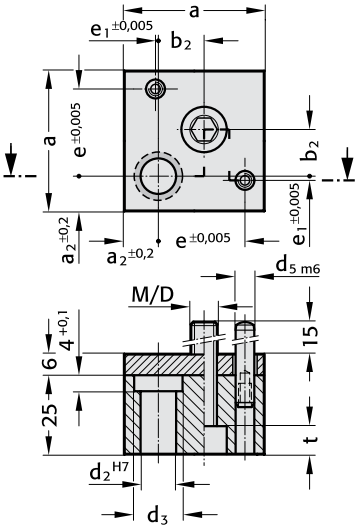

Execution:

The centres of the pinholes d_5 are the reference points for the position of the punch bore.
The e-dimensions have a tolerance of ± 0,005 mm.
The square retainers are interchangeable.

Note:

Supplied with dowel pins and screws DIN EN ISO 4762.

2661.04.

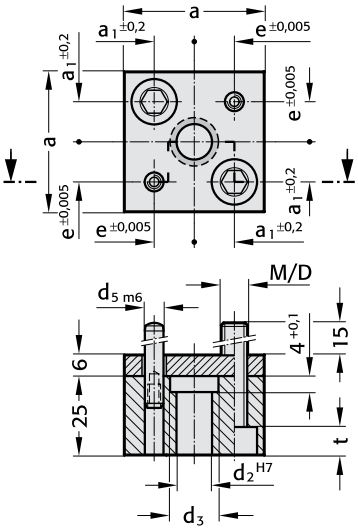

Execution:

The centres of the pinholes d_5 are the reference points for the position of the punch bore.
The e-dimensions have a tolerance of ± 0,005 mm.
The square retainers are interchangeable.

Note:

Supplied with dowel pins and screws DIN EN ISO 4762.

2661.03.

d_2	d_3	d_5	M/D	a	a_2	b_2	e	e_1	t
10	14	8	8/ 9	45	11	15	28	1	9
13	17								
16	20								
20	25	10	10/11	56	17	18	32	5	11
25	30								

Ordering code (example):

Square retainer	= 2661.
for round Punch to VDI 3374	= 03.
d_2 = ∅ 10 mm	= 10
Order No	= 2661.03.10

2661.04.

d_2	d_3	d_5	M/D	a	a_1, e	t
10	14	8	8/ 9	45	13	9
13	17					
16	20					
20	25	10	10/11	56	16	11
25	30		12/13,5	63	20	13
32	37					

Ordering code (example):

Square retainer	= 2661.
for round Punch to VDI 3374	= 04.
d_2 = ∅ 16 mm	= 16
Order No	= 2661.04.16

FIBRO

2661.05
2661.06.

Square Precision Retainers for Profile Punches to VDI 3374

Execution:

The centres of the pin holes d_5 are the reference points for the position of the punch bore.
The e-dimensions have a tolerance of ± 0,005 mm.
The square retainers are interchangeable.

Note:

Supplied with dowel pins and screws DIN EN ISO 4762.

2661.05.

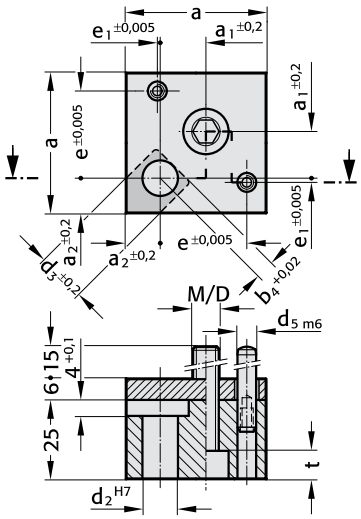

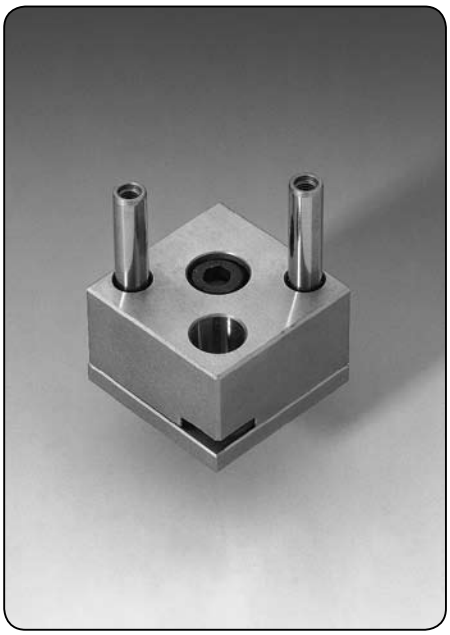

Execution:

The centres of the pin holes d_5 are the reference points for the position of the punch bore.
The e-dimensions have a tolerance of ± 0,005 mm.
The square retainers are interchangeable.

Note:

Supplied with dowel pins and screws DIN EN ISO 4762.

2661.06.

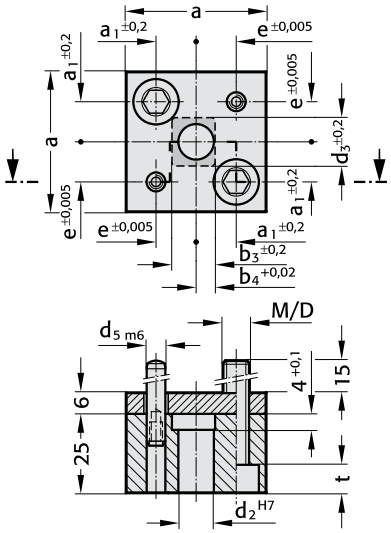

2661.05.

d_2	d_3	d_5	M/D	a	a_2	a_1	e	e_1	b_4	t
10	14	8	8/ 9	45	11	15	28	1	5	9
13	17								6,5	
16	20								8	
20	25	10	10/11	56	17	18	32	5	10	11
25	30								12,5	

Ordering code (example):

Square retainer	= 2661.
for profile punch to VDI 3374	= 05.
d_2 = ∅ 13 mm	= 13
Order No	= 2662.05.13

2661.06.

d_2	d_3	d_5	M/D	a	a_1, e	b_3	b_4	t
10	14	8	8/ 9	45	13	12	5	9
13	17					15	6,5	
16	20					18	8	
20	25	10	10/11	56	16	22,5	10	11
25	30		12/13,5	63	20	27,5	12,5	

Ordering code (example):

Square retainer	= 2661.
for profile punch to VDI 3374	= 06.
d_2 = ∅ 20 mm	= 20
Order No	= 2661.06.20

Rectangular Precision Retainers for Punches to VDI 3374

2662.03.
2662.04.

2662.03.

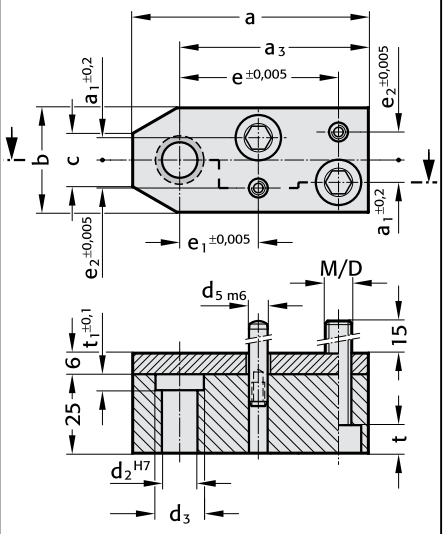

Execution:

The centres of the pin holes d_5 are the reference points for the position of the punch bore.
The e-dimensions have a tolerance of ± 0,005 mm.
The rectangular retainers are interchangeable.

Note:

Supplied with dowel pins and screws DIN EN ISO 4762.

2662.04.

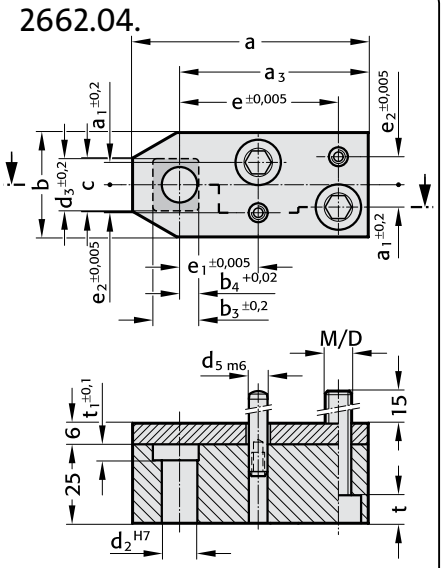

Execution:

The centres of the pin holes d_5 are the reference points for the position of the punch bore.
The e-dimensions have a tolerance of ± 0,005 mm.
The rectangular retainers are interchangeable.

Note:

Supplied with dowel pins and screws DIN EN ISO 4762.

2662.03.

d_2	d_3	d_5	M/D	a	a_1	a_3	b	e	e_1	e_2	c	t	t_1
6	10	8	8/ 9	75	7	60	32	50	25	9	16	9	3
10	14												4
13	17												
16	20												
20	25	10	10/11	85	9	63	40	53	28	11	20	11	
25	30												
32	37		12/13,5	95	13	70	50			15	30	13	

Ordering code (example):

Rectangular Retainer	= 2662.
for round punch to VDI 3374	= 03.
d_2 = ∅ 10 mm	= 10
Order No	= 2662.03.10

2662.04.

d_2	d_3	d_5	M/D	a	a_1	a_3	b	b_3	b_4	e	e_1	e_2	c	t	t_1
6	10	8	8/ 9	75	7	60	32	8	3	50	25	9	16	9	3
10	14							12	5						4
13	17							15	6,5						
16	20							18	8						
20	25	10	10/11	85	9	63	40	22,5	10	53	28	11	20	11	
25	30							27,5	12,5						

Ordering code (example):

Rectangular Retainer	= 2662.
for profile punch to VDI 3374	= 04.
d_2 = ∅ 16 mm	= 16
Order No	= 2662.04.16

Accessories

Stripping units

2431.7.

2431.7.

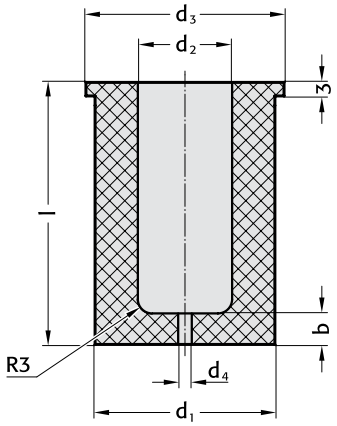

Material:

FIBROFLEX® 95 Shore A

Note:

Stripping units can be used for retainers 2664.02./.04./.05./.06.

	Stripping unit lenght l				
d_2	35	43	53	63	73
10	●	●	●	●	
13	●	●	●	●	●
16	●	●	●	●	●
20	●	●	●	●	●
25	●	●	●	●	●
32	●	●	●	●	●
38		●	●	●	●
40		●	●	●	●
	Punch lengths in use				
Ball-lock punch, light duty	63	71	80	090	100
Ball-lock punch, heavy duty	71	80	90	100	110
Precision punch ISO 8020	–	71	80	090	100

Installation example:

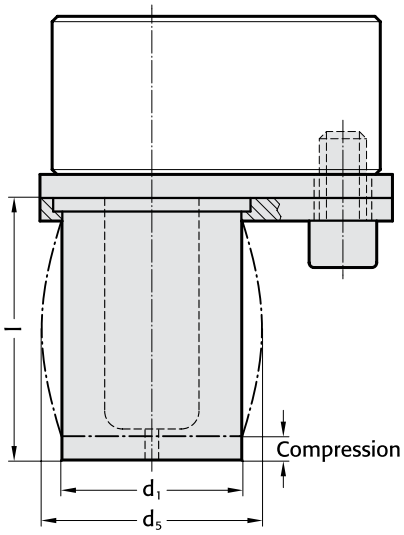

2431.7.

						l				
d_2	d_1	d_3	d_4	$d_{5\ max.}$	b	35	43	53	63	73
10	18	21	3	22	6	●	●	●	●	
13	23	26	3	26,5	6	●	●	●	●	●
16	30	33	3	34	6	●	●	●	●	●
20	33	36	3	38	7	●	●	●	●	●
25	40	43	3	47,6	7	●	●	●	●	●
32	50	54	4	57,9	7	●	●	●	●	●
38	60	64	4	69,6	8		●	●	●	●
40	60	64	4	69,6	8		●	●	●	●

Ordering example:

Stripping unit	=	2431.7.
d_2 = 10 mm	=	10.
l = 53 mm	=	53
Order number	=	2431.7.10.53

* values for the stripping force are dependent on a number of parameters (e.g. lubricant, temperature etc.) and may vary from those given here.

** max spring travel should not exceed 15% of the length

	Stripping forces (N)*															
	Spring travel	3 mm	6 mm	9 mm	3 mm	6 mm	9 mm	3 mm	6 mm	9 mm	3 mm	6 mm	9 mm	3 mm	6 mm	9 mm
d_2	Length	35	35	35	43	43	43	53	53	53	63	63	63	73	73	73
10		1300	**	**	1000	1700	**	900	1400	**	700	1200	1600	—	—	—
13		2100	**	**	1700	2700	**	1400	2200	**	1200	1900	2400	1000	1600	2000
16		3000	**	**	2500	4000	**	2000	3200	**	1700	2700	3500	1500	2400	3000
20		3500	**	**	2900	4700	**	2400	3800	**	2000	3200	4100	1700	2700	3600
25		5400	**	**	4400	7100	**	3600	5800	**	3000	4900	6300	2600	4200	5500
32		8400	**	**	6800	10900	**	5500	8800	**	4700	7500	9700	4000	6400	8400
38		—	—	—	—	—	**	7000	10400	**	6100	9200	12300	5000	7600	10100
40		—	—	—	10400	16600	**	8500	13600	**	7000	11300	14800	6000	9800	127000

2667. Stripping unit mountings

2667.1.

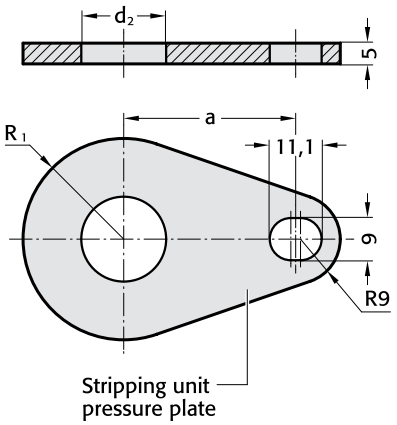

2667.2.

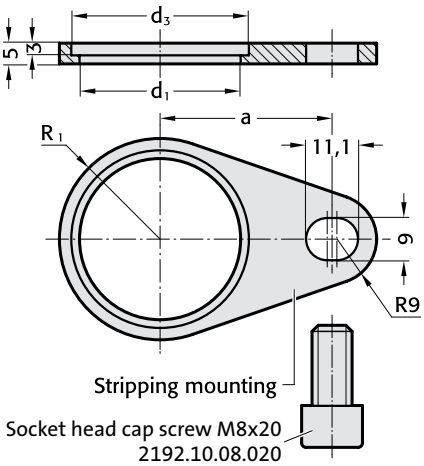

Installation example:

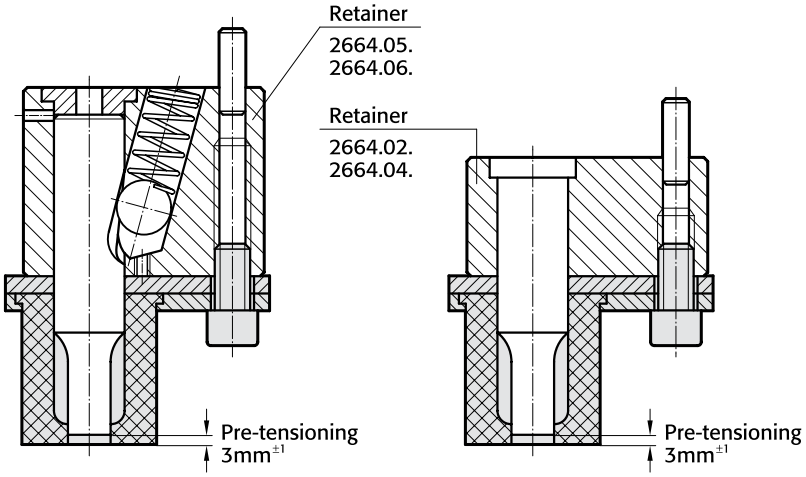

Mounting on retainer for ball-lock punch, multi-sided

Mounting on precision retainer, multi-sided ISO 8020

Note:

Pressure plate, mounting plate and screw must all be ordered individually.

2667.1/2.

d_2	d_1	d_3	R_1	a
10	18	21	13	28
13	23	26	15,5	31
16	30	33	18	32,9
20	33	36	20,5	34,8
25	40	43	24	39,8
32	50	54	31	41,3
38	60	64	36	44
40	60	64	36	44

Ordering example:

Stripping unit mountings	=	2667.
Type	=	1.
d_2 = 10mm	=	010
Order number	=	2667.1.010

Special Punches
Custom made

FIBRO

FIBRO manufactures Special Form Punches and -Matrices on most modern equipment. Projection Form Grinding, Creep Feed Grinding, EDM and Wire-EDM are used acc. to design details. Many years of experience enable FIBRO to chose best suitable materials and methods.

We manufacture to customer´s drawings -:
Piercing Punches • Draw Punched • Form Punches • Pre-Extrusion Punches and Ejectors for Bolt Manufacturing • Flow-Forming Punches • Punches with 30°–Conical Heads, or other head shapes

High-Precision Special Parts to Customer´s Drawings








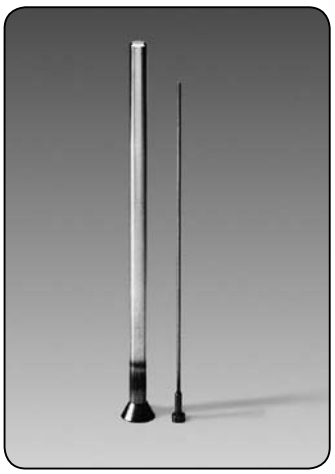






subject to alterations

Precision Punches, Square/Rectangular without/with Hot Upset-Forged Head

230.
231.

230. Shape A

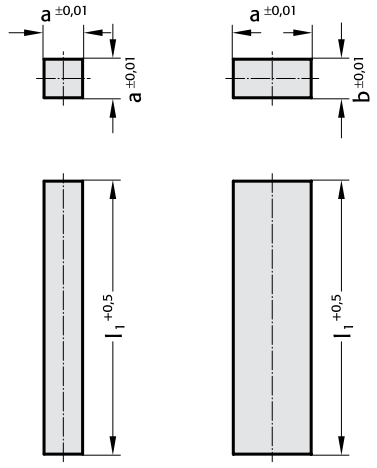

231. Shape B

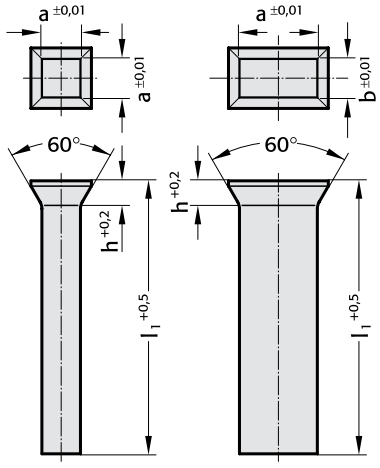

Material:

HSS
Order No: Shape A = 230.3., Shape B = 231.3.
Hardness: Shank 64±2 HRC
Head 52±3 HRC

Description of FIBRO materials for die components:
pages E 10 and E 11.

Execution:

Punch shanks precision ground.
Heads hot upset forged – ground on special request.

230.

a	b	l_1
1– 8	1	stock length of square punches: 73,5 mm; other materials and dimensions on request.
2–10	2	
3–12	3	
4–12	4	
5–15	5	
6–20	6	
7–24	7	
8–24	8	
9–28	9	
10–34	10	
12–34	12	

231.

a	b	h	l_1
1– 8	1	1,2	stock length of square punches: 71 mm other materials and dimensions on request.
2–10	2	1,4	
3–12	3	1,8	
4–12	4		
5–15	5		
6–20	6	2,0	
7–24	7	2,8	
8–24	8		
9–28	9		
10–34	10		
12–34	12		

Ordering Code (example):

Punch	=	231.
Material HSS	=	3.
a = 10 mm	=	1000.
b = 6 mm	=	0600.
l_1 = 71 mm	=	071
Order No	=	231.3.1000.0600.071

FIBRO

236.1.
236.001

Precision Dowel Pins (Parallel) with Internal Extracting Thread similar to DIN EN ISO 8735/ISO 8735 Dowel Pin Extractor "FIBROZIPP"

236.1.

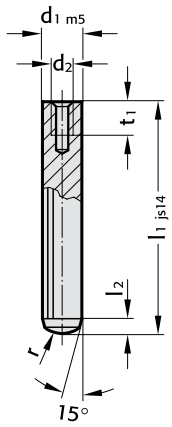

Material:

Case-hardening steel – core strength (tensile) 800–1000 N/mm².

Order No: 236.1.
Hardness: 60±2 HRC
Nitrided on request.

Execution:

Case-hardened and ground to finest finish. FIBRO Dowel Pins are manufactured with the exacting requirements of high class diemaking in mind. Whereas DIN EN ISO 8735 stipulates ISO Class 6 for dowels, we produce our pins to m5.

FIBRO Dowels with internal extracting thread deviate from DIN in that they are case-hardened and that a smaller thread is used.
This increases the crossection around the threaded hole and thus prevents breaking.

Ordering Code (example):

Dowel Pin with Extracting Thread	= 236.1.
d_1 = ∅ 12 mm	= 1200.
l_1 = 100 mm	= 100
Order No	= 236.1.1200.100

236.1.

d_1	6	8	10	12	14	16	20	25
d_2	M 4	M 5	M 6	M 6	M 8	M 8	M 10	M 16
t_1	6	8	10	10	12	12	16	24
l_2	2,1	2,6	3	3,8	4	4,7	6	6
r	6	8	10	12	14	16	20	25
l_1								
16	●							
18	●							
20	●	●						
24	●	●	●					
28	●	●	●	●				
32	●	●	●	●	●	●		
36	●	●	●	●	●	●	●	
40	●	●	●	●	●	●	●	
45	●	●	●	●	●	●	●	●
50	●	●	●	●	●	●	●	●
55	●	●	●	●	●	●	●	●
60	●	●	●	●	●	●	●	●
70		●	●	●	●	●	●	●
80		●	●	●	●	●	●	●
90		●	●	●	●	●	●	●
100		●	●	●	●	●	●	●
120				●	●	●	●	●

236.001
FIBROZIPP

Extraction tool for the fast and convenient removal of dowels with internal extracting thread – also for shafts, plugs and other machine components.

The tool comes with interchangeable adaptors and screws, to fit all threads from M3 to M16.

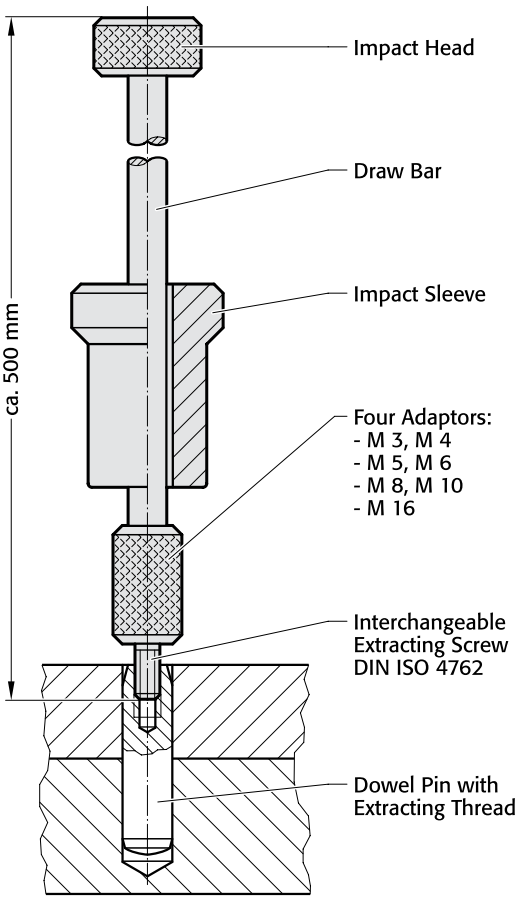

Precision Dowel Pins (Parallel) with Internal Extracting Thread similar to DIN EN ISO 8735/ISO 8735 Dowel Pin Extractor "FIBROZIPP"

FIBRO
2361.1.
236.001

2361.1.

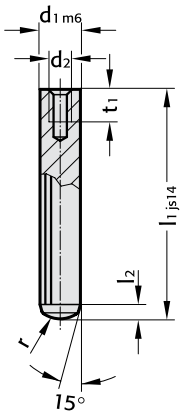

236.001 FIBROZIPP

Extraction tool for the fast and convenient removal of dowels with internal extracting thread – also for shafts, plugs and other machine components.

The tool comes with interchangeable adaptors and screws, to fit all threads from M3 to M16.

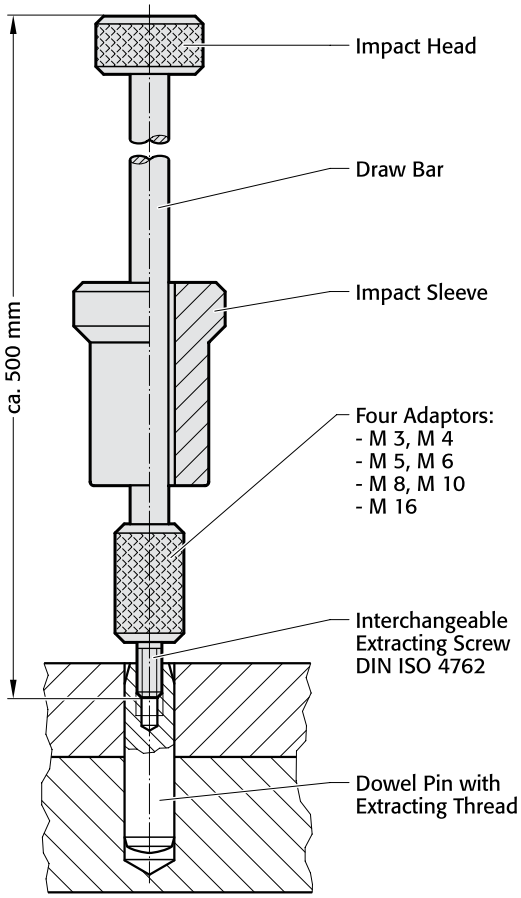

Ordering Code (example):

Dowel Pin	= 2361.1.
d_1 = ∅ 10 mm	= 1000.
l_1 = 45 mm	= 045
Order No	= 2361.1.1000.045

Material:

WS Tough and hard tool steel, wear resistant – core strength (tensile) 600 N/mm² min.

Order No: 2361.1.

Hardness: 60 ± 2 HRC

Execution:

Hardened and ground to finest finish. FIBRO Dowel Pins are manufactured with the exacting requirements of high class diemaking in mind.

2361.1.

d_1	4	5	6	8	10	12	14	16	20
d_2	M 3	M 3	M 4	M 5	M 6	M 6	M 8	M 8	M 10
t_1	4,5	6	6	8	10	10	12	12	16
l_2	1,3	1,7	2,1	2,6	3	3,8	4	4,7	6
r	4	5	6	8	10	12	14	16	20
l_1									
8		●							
10	●	●							
12	●	●	●						
14	●	●	●						
16	●	●	●	●	●				
18	●	●	●	●	●				
20	●	●	●	●	●	●			
22			●	●					
24	●	●	●	●	●	●			
26			●	●					
28	●	●	●	●	●	●	●		
30	●	●	●	●	●	●			
32	●	●	●	●	●	●	●	●	
36	●	●	●	●	●	●	●	●	●
40	●	●	●	●	●	●	●	●	●
45		●	●	●	●	●	●	●	●
50	●	●	●	●	●	●	●	●	●
55		●	●	●	●	●	●	●	●
60		●	●	●	●	●	●	●	●
70			●	●	●	●	●	●	●
80			●	●	●	●	●	●	●
90				●	●	●	●	●	●
100				●	●	●	●	●	●
120				●	●	●	●	●	●

FIBRO

265.1. 2650.1.

High-Precision Liner Bushes for Dowel Pins, for bonding for push fit

265.1.

for epoxy bonding

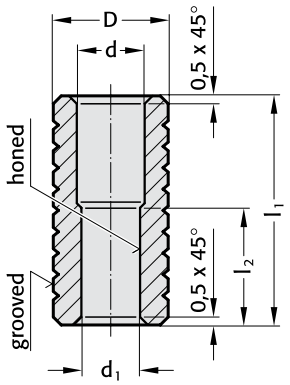

Material:
Tool Steel, hardened
Hardness 54±2 HRC

2650.1.

for push fit

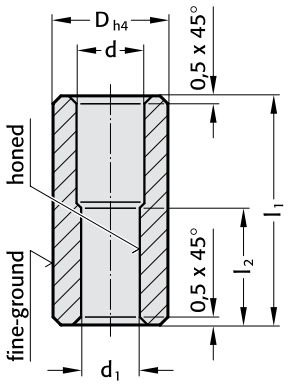

Material:
Tool Steel, hardened
Hardness 54±2 HRC

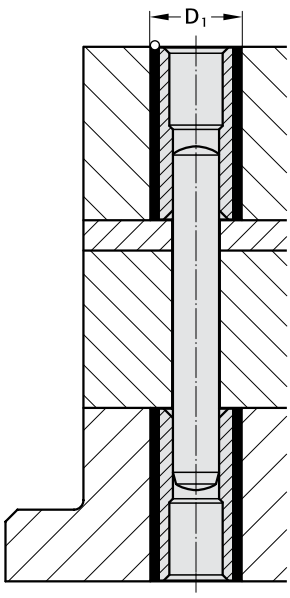

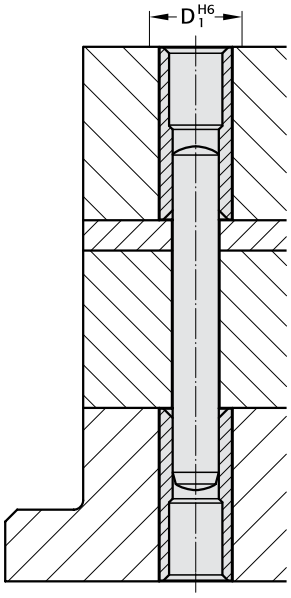

Epoxy-Bonding

FIBRO Hardened Dowel Liner Bushes solve the problem of wear on soft parts subjected to frequent dismantling. Held in perfect co-axial alignment by the close-fitting dowel, they are epoxy-bonded into rough-drilled clearance holes. In hardened parts, Dowel Liner Bushes help to overcome the ever-present toolroom problem of heat treatment distortion – insurmountable exept
where jig grinding facilities are available and justifiable on cost grounds. Retainer holes for Dowel Liner Bushes should be approximately 2 mm larger in diameter than the bush O.D. – a coarse finish is desirable. Following exact positioning/aligning, FIBROLIT® ZWO or FIBROFIX® SECHS is used for bonding.

Push Fit

The position of the bush is given by push fit hole tolerance H 6.
The adhesive order no. 281.648 provides optimum bush retention whilst offering the following advantages:
– high accuracy and stiffness
– no problems to find position when changing bushings.

We do not recommend to press fit bushings.

Ordering Code (example):

One Dowel Liner Bush – only –

Dowel Liner Bush	= 265.	analogous 2650.
Material: Tool Steel	= 1.	
d_1 = ∅ 8,0 mm	= 0800.	
Quantity: one	= 1	
Order No	= 265.1.0800.1	

Ordering Code (example):

One Dowel Liner Bush + Matching Dowel

Dowel Liner Bush	= 265.	analogous 2650.
Material: Tool Steel	= 1.	
d_1 = ∅ 8,0 mm	= 0800.	
Quantity: one	= 1.	
Dowel: length= 40 mm	= 040	
Order No	= 265.1.0800.1.040	

Ordering Code (example):

Two Dowel Liner Bushes + one Dowel

Dowel Liner Bush	= 265.	analogous 2650.
Material: Tool Steel	= 1.	
d_1 = ∅ 8,0 mm	= 0800.	
Quantity: two	= 2.	
Dowel: length= 50 mm	= 050	
Order No	= 265.1.0800.2.050	

265.1.

d_1	d	D	D_1	l_1	l_2
6	7	10	12	25	12
8	9	12	14	30	16
10	11	16	18	36	20

2650.1.

d_1	d	D	D_1^{H6}	l_1	l_2
6	7	10	10	25	12
8	9	12	12	30	16
10	11	16	16	36	20

Precision Dowel Pins (Parallel) similar to DIN EN ISO 8734/ISO 8734

235.1.

235.1.

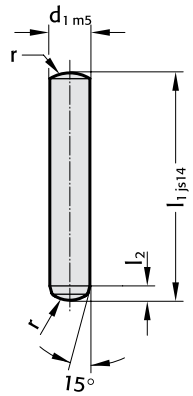

Execution:

Hardened and ground to finest finish.

FIBRO-Dowel Pins are manufactured with the exacting requirements of high class diemaking in mind. Whereas DIN EN ISO 8734 stipulates ISO Class 6 for dowels, we produce our pins to m5.

Ordering Code (example):

Dowel Pin	= 235.1.
d_1 = ∅ 10 mm	= 1000.
l_1 = 80 mm	= 080
Order No	= 235.1.1000.080

Material:

WS	Tough and hard tool steel, wear resistant. over 6 mm: Case-hardening steel – core strength (tensile) 800–1000 N/mm².
Order No:	235.1.
Hardness:	60 ± 2 HRC
	Nitrided on request.

235.1.

d_1	1	1,5	2	2,5	3	4	5	6	8	10	12	14	16	20
l_2	0,48	0,62	0,78	0,95	1,1	1,4	1,7	2,1	2,6	3	3,8	3,8	4,7	6
r	1	1,6	2	2,5	3	4	5	6	8	10	12	16	16	20
l_1														
6		●	●	●	●	●								
8	●	●	●	●	●	●	●							
10	●	●	●	●	●	●	●	●	●					
12	●	●	●	●	●	●	●	●	●					
14		●	●	●	●	●	●	●	●					
16		●	●	●	●	●	●	●	●	●				
18			●	●	●	●	●	●	●	●				
20			●	●	●	●	●	●	●	●	●			
24			●	●	●	●	●	●	●	●	●			
28			●	●	●	●	●	●	●	●	●			
32			●	●	●	●	●	●	●	●	●			
36			●	●	●	●	●	●	●	●	●	●		
40					●	●	●	●	●	●	●	●	●	
45					●	●	●	●	●	●	●	●	●	
50						●	●	●	●	●	●	●	●	
55						●	●	●	●	●	●	●	●	●
60						●	●	●	●	●	●	●	●	●
70							●	●	●	●	●	●	●	●
80							●	●	●	●	●	●	●	●
90								●	●	●	●	●	●	●
100								●	●	●	●	●	●	●
120									●	●	●	●	●	●
130											●			
140													●	●

FIBRO

2351.1.

Precision Dowel Pins (Parallel) similar to DIN EN ISO 8734/ISO 8734

2351.1.

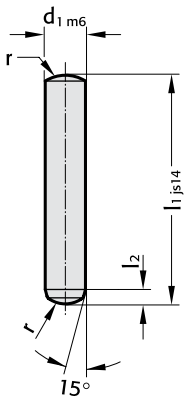

Material:

WS	Tough and hard tool steel, case-hardening steel – core strength (tensile) 600 N/mm²
Order No:	2351.1.
Hardness:	60±2 HRC

Execution:

Hardened and ground to finest finish.

FIBRO-Dowel Pins are manufactured with the exacting requirements of high class diemaking in mind.

Ordering Code (example):

Dowel Pin	= 2351.1.	
∅ d_1 = 10 mm	=	1000.
l_1 = 45 mm	=	045
Order No	= 2351.1.1000.045	

2351.1.

d_1	1	1,5	2	2,5	3	4	5	6	8	10	12	14	16	20
l_2	0,4	0,5	0,6	0,7	0,8	1	1,2	1,5	1,8	2	2,5	2,5	3	4
r	1	1,6	2	2,5	3	4	5	6	8	10	12	16	16	20
l_1														
4	●	●	●											
5	●	●	●	●	●									
6	●	●	●	●	●	●								
8	●	●	●	●	●	●	●	●						
10	●	●	●	●	●	●	●	●						
12	●	●	●	●	●	●	●	●						
14		●	●	●	●	●	●	●	●					
16		●	●	●	●	●	●	●	●	●				
18			●	●	●	●	●	●	●	●				
20		●	●	●	●	●	●	●	●	●	●			
22		●	●	●	●	●	●	●	●	●				
24		●	●	●	●	●	●	●	●	●	●	●	●	
26			●	●	●	●	●	●	●	●	●		●	
28			●	●	●	●	●	●	●	●	●	●	●	
30			●	●	●	●	●	●	●	●	●	●	●	
32			●	●	●	●	●	●	●	●	●	●	●	
36					●	●	●	●	●	●	●	●	●	●
40			●		●	●	●	●	●	●	●	●	●	●
45					●	●	●	●	●	●	●	●	●	●
50					●	●	●	●	●	●	●	●	●	●
55							●	●	●	●	●	●	●	●
60					●	●	●	●	●	●	●	●	●	●
70						●	●	●	●	●	●	●	●	●
80						●	●	●	●	●	●	●	●	●
90								●	●	●	●	●	●	●
100								●	●	●	●	●	●	●
120									●	●	●	●	●	●

FIBRO

276.
277.

Precision Drill Bushes Shape A
DIN 172, with collar
DIN 179, without collar

Material:

Special Steel, hardened
Hardness: 740±40 HV10

Execution:

Diameters d_1 and d_2 and shoulder precision ground.

Ordering Code (example):

Drill Bush	=	276.
Material: Special Steel	=	1.
d_1 = 8,0 mm	=	0800.
l_1 = 20 mm	=	020
Order No	=	276.1.0800.020

276. DIN 172 Shape A

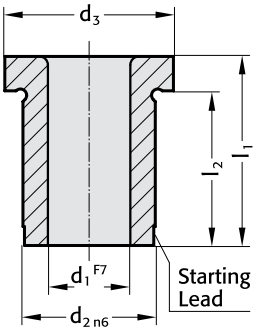

Material:

Special Steel, hardened
Hardness: 740±40 HV10

Execution:

Diameters d_1 and d_2 precision ground.

Ordering code (example):

Drill Bush	=	277.
Material: Special Steel	=	1.
d_1 = 9,1 mm	=	0910.
l_1 = 25 mm	=	025
Order No	=	277.1.0910.025

277. DIN 179 Shape A

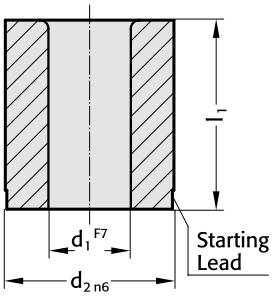

276.

d_1*	d_2	d_3	short l_1	short l_2	medium l_1	medium l_2	long l_1	long l_2
0,4 – 1,0	3	6	6	4	9	7	–	–
1,1 – 1,8	4	7	6	4	9	7	–	–
1,9 – 2,6	5	8	6	4	9	7	–	–
2,7 – 3,3	6	9	8	5,5	12	9,5	16	13,5
3,4 – 4,0	7	10	8	5,5	12	9,5	16	13,5
4,1 – 5,0	8	11	8	5,5	12	9,5	16	13,5
5,1 – 6,0	10	13	10	7	16	13	20	17
6,1 – 8,0	12	15	10	7	16	13	20	17
8,1 – 10,0	15	18	12	9	20	17	25	22
10,1 – 12,0	18	22	12	8	20	16	25	21
12,1 – 15,0	22	26	16	12	28	24	36	32
15,1 – 18,0	26	30	16	12	28	24	36	32
18,1 – 22,0	30	34	20	15	36	31	45	40
22,1 – 26,0	35	39	20	15	36	31	45	40
26,1 – 30,0	42	46	25	20	45	40	56	51
30,1 – 35,0	48	52	25	20	45	40	56	51
35,1 – 42,0	55	59	30	25	56	51	67	62
42,1 – 48,0	62	66	30	24	56	50	67	61
48,1 – 55,0	70	74	30	24	56	50	67	61
55,1 – 63,0	78	82	35	29	67	61	78	72

*diameter steps 0,1 mm

277.

d_1*	d_2	short l_1	medium l_1	long l_1
0,4 – 1,0	3	6	9	–
1,1 – 1,8	4	6	9	–
1,9 – 2,6	5	6	9	–
2,7 – 3,3	6	8	12	16
3,4 – 4,0	7	8	12	16
4,1 – 5,0	8	8	12	16
5,1 – 6,0	10	10	16	20
6,1 – 8,0	12	10	16	20
8,1 – 10,0	15	12	20	25
10,1 – 12,0	18	12	20	25
12,1 – 15,0	22	16	28	36
15,1 – 18,0	26	16	28	36
18,1 – 22,0	30	20	36	45
22,1 – 26,0	35	20	36	45
26,1 – 30,0	42	25	45	56
30,1 – 35,0	48	25	45	56
35,1 – 42,0	55	30	56	67
42,1 – 48,0	62	30	56	67
48,1 – 55,0	70	30	56	67
55,1 – 63,0	78	35	67	78

*diameter steps 0,1 mm

High-Precision Gauge Pins DIN 2269

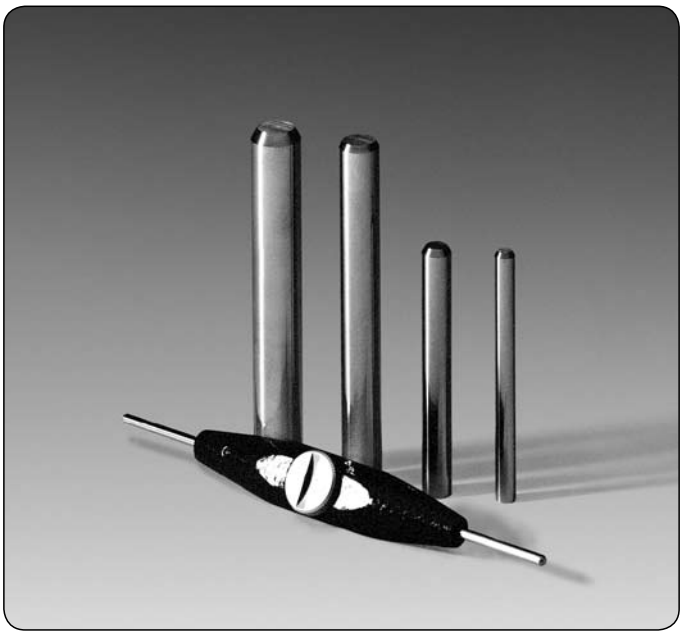

240.

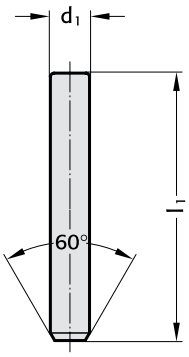

Material:

Alloy Tool Steel, hardened and tempered.
Age-treated repeatedly

Hardness: 60 ±2HRC

Execution:

Precision ground
Class I – Accuracy: diameter tolerance ±0,001
Class II – Accuracy: diameter tolerance ±0,002

Direct gauging of bore diameters

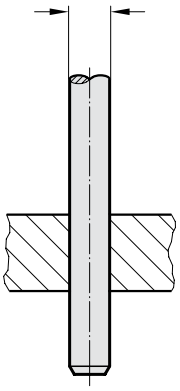

Measurement of centre-distance between two bores

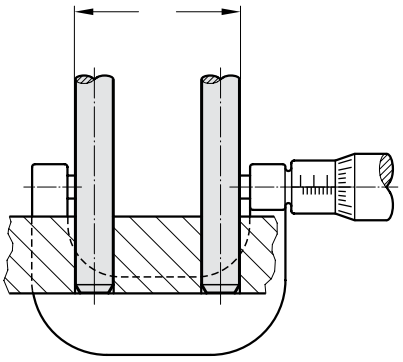

Concentricity check on a bush

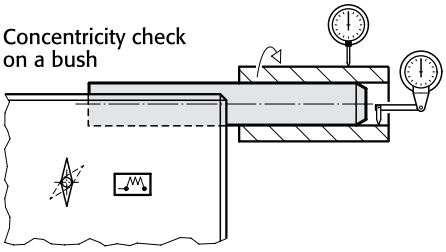

Measurements on prismatic faces

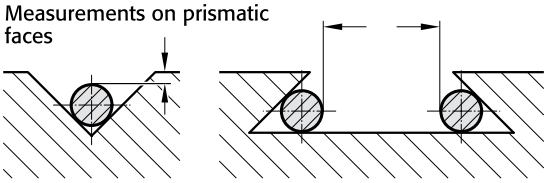

		Order No
Single Pins:	Class I-Accuracy	240.1.
	Class II-Accuracy	240.2.
Small Set:	91 Gauge Pins from ∅ 1-10 mm in steps of 0,1 mm, complete in wooden box	
	Class I-Accuracy	240.51.
	Class II-Accuracy	240.52.
Large Set:	273 Gauge Pins from ∅ 1-10 mm in steps of 0,1 mm, plus one each. 0,01 mm-oversize/undersize pin – complete in wooden box	
	Class I-Accuracy	240.41.
	Class II-Accuracy	240.42.
Special Sets:	supplied to customer's requirements in respect of assortment and class of accuracy	

All Gauge Pins from 3 mm upward are marked with their actual size.

240.

d_1	steps	l_1
0,30– 1,00	0,01	50
1,01– 3,00		
3,01– 6,00		
6,01– 10,00		70
10,01– 12,00		
12,01– 14,00		
14,01– 16,00		
16,01– 19,00		
19,01– 20,00		

Ordering Code (example):

Gauge Pin	= 240.
Class I-Accuracy	= 1.
d_1 = ∅ 4,04 mm	= 0404
Order No	= 240.1.0404

240.

High-Precision Gauge Pins DIN 2269
Gauge Pin Holders, Wooden Boxes

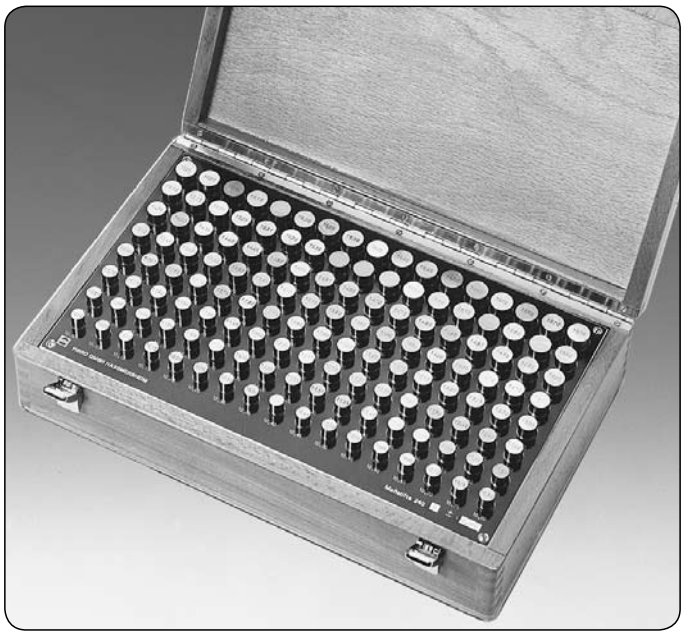

Calibration of a comparator

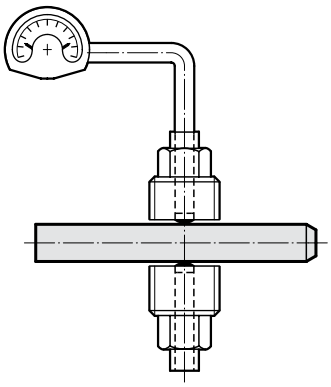

Inspection for squareness of a bore

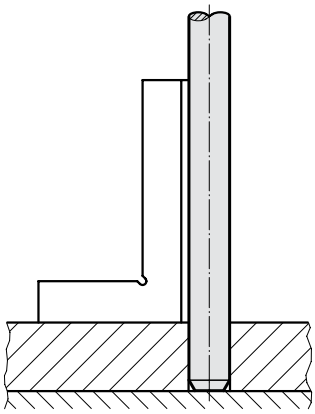

Check on parallelism

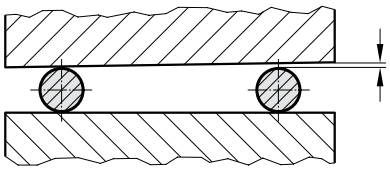

Measuring of gear teeth, threads etc.

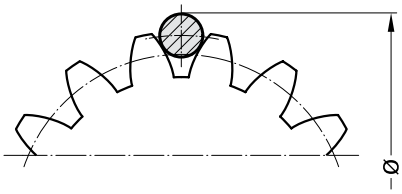

240.

Gauge Pin Holders (with pins)

for diameters	Order No
from 1– 2	240.45.1
from 2– 4	240.45.2
from 4– 6	240.45.3
from 6– 8	240.45.4
from 8–10	240.45.5

Gauge Pin Holders are double-ended, to carry two pins e.g. for go – no go measurements etc.

Wooden boxes: (without pins)	with drilled holes, for the safe and orderly storage of gauge pins – each hole marked with the requisite pin size.	Order No
	Large Set of approx. 270 Pins size: 390 x 250 x 90 mm	240.91.
	Small Set of approx. 90 Pins size: 285 x 155 x 90	240.92.
	Boxes complete with carrier board inset	
	Class I-Accuracy	1
	Class II-Accuracy	2

Ordering code (example):

Gauge pin box – approx. 270 pins	= 240.91.	
Class I-Accuracy	=	1
Order No	= 240.91.1	

High Precision Gauge Pins with Handle 240.11./22.
High Precision Gauge Pins – Boxed Sets 240.31./32.

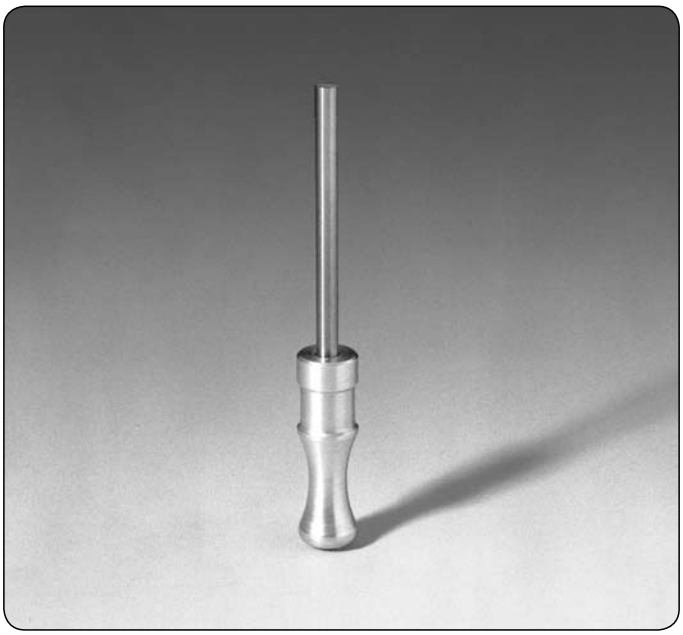

240.11.

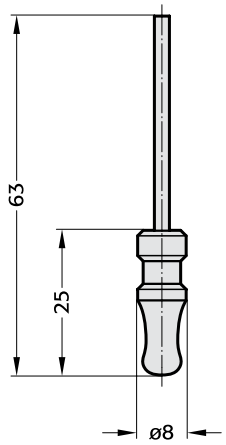

240.11. High-Precision Gauge Pins with Handle

The Gauge Pins are firmly fixed to the handle. Each Pin is marked with its true diameter.

		Order No
Single Gauge Pins:	Ø 0,3 – 3,0 mm In dia. steps of 0.01 mm	
	Class I -Accuracy	240.11.
	Class II-Accuracy	240.22.
Assortment:	84 Gauge Pins from 0.3 – 3.0 mm, in dia. steps of 0.1 mm plus one each pin with undersize 0.01 and oversize 0.01 mm. (for example 0.29 – 0.30 – 0.31 etc.)	
	Class I -Accuracy	240.31.
	Class II-Accuracy	240.32.
Special Assortments:	to customer's specifications in respect of class of accuracy	

Execution:
Wooden boxes for Gauge Pins – with drilled holes in wooden tray insert. Each hole marked with true size of pin.
External dimensions: 155x90x285 mm

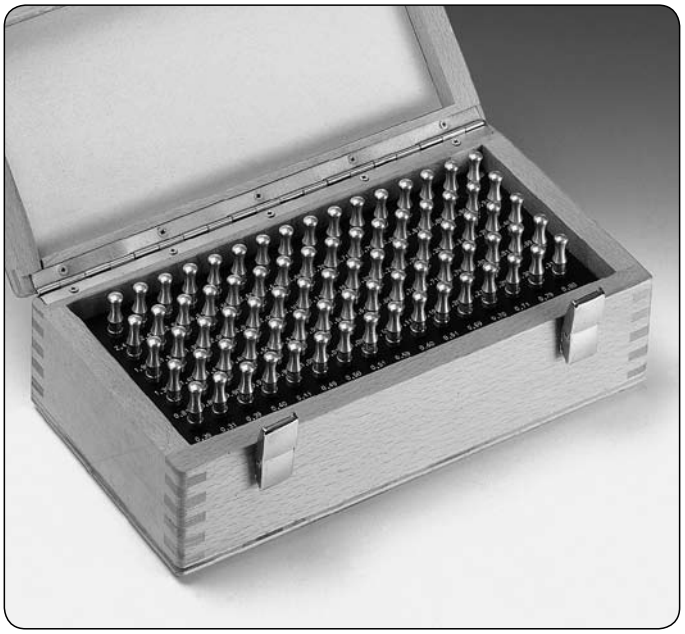

Material:

Alloy tool steel, hardened and tempered.
Repeatedly age-treated.
Hardness 60 ± 2 HRC.
fine-ground
Class I -Accuracy ±0.001
Class II-Accuracy ±0.002
to DIN 2269

Ordering Code (example):

Gauge Pin	= 240.
Class I-Accuracy, with handle	= 11.
d_1 = 1,5 mm	= 0150
Order No	= 240.11.0150

FIBRO

2282.01.

Punching and Embossing Unit with Bottom Die for punched holes and self tapping screws

Material:

HSS

Execution:

The punching and embossing unit with bottom die consists of:

1 x punch die

1 x embossing die

1 x bottom die

Sheet metal thickness

max. 0,6 mm	=	2282.01.035
	=	2282.01.039
max. 0,8 mm	=	2282.01.042
max. 0,9 mm	=	2282.01.048
max. 1,0 mm	=	2282.01.055
	=	2282.01.063

2282.01.xxx

2282.01.xxx.1 Embossing die

2282.01.xxx.2 Punch die

2282.01.xxx.3 Bottom die

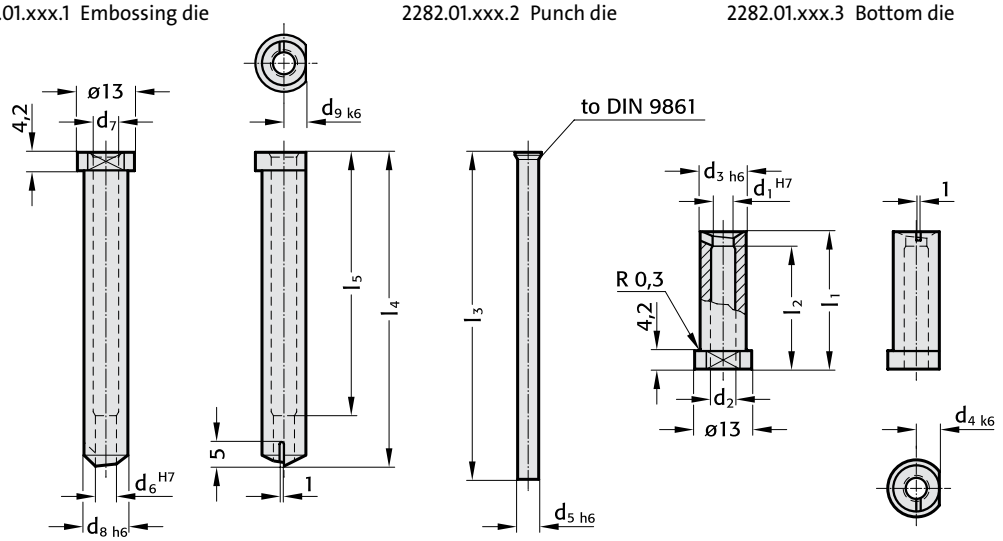

Example of application:

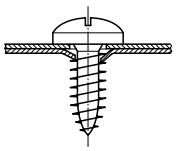

2282.01.

Order No	Nominal diameter = thread size	d_1^{H7}	d_2	d_{3h6}	d_{4k6}	d_{5h6}	d_6^{H7}	d_7	d_{8h6}	d_{9k6}	l_1	l_2	l_3	l_4	l_5
2282.01.035	B 3,5	2,75	3,2	7,5	3,75	2,7	2,7	3,1	7,5	3,75	31,3	28	74,5	71,5	60
039	B 3,9	3,05	3,4	7,5	3,75	3,0	3,0	3,6	7,5	3,75					
042	B 4,2	3,15	3,5	8,5	4,25	3,1	3,1	3,7	8,0	4,0					
048	B 4,8	3,85	4,2	9,0	4,50	3,8	3,8	4,5	8,0	4,0					
055	B 5,5	4,35	4,8	9,0	4,50	4,3	4,3	5,0	8,0	4,0					
063	B 6,3	4,85	5,3	10,5	5,25	4,8	4,8	5,5	10,0	5,0					

Ordering Code (Example)

Punching and embossing unit with bottom die for punched holes	= 2282.01.
Nominal diameter = thread size (self tapping screw) = B = 3.5 mm	= 035
Order No	= 2282.01.035