Gas Springs with Low Build Height

Construction heights with the same stroke and the same/increased spring force

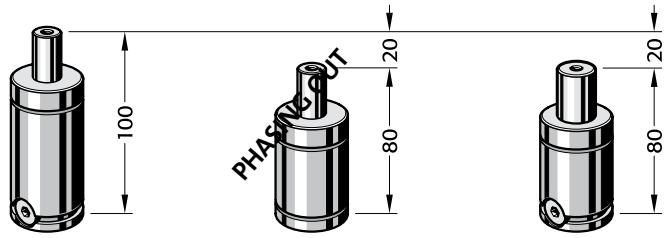

Normal construction heights 2480.12.00250.025 | Compact construction heights 2485.71.00250.025 | Power Line 2487.12.00500.025

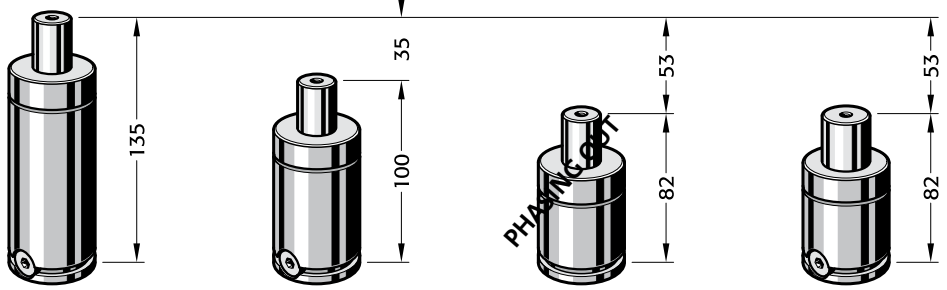

Normal construction heights 2480.12.00500.025 | Low construction heights 2485.12.00500.025 | Low construction heights 2485.71.00500.025 | Power Line 2487.12.00750.025

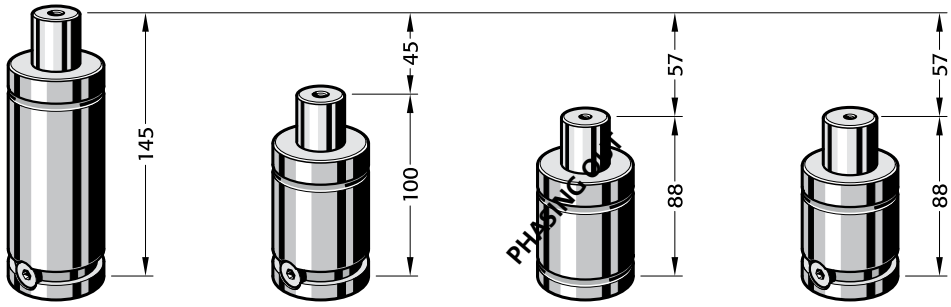

Normal construction heights 2480.13.00750.025 | Low construction heights 2485.12.00750.025 | Low construction heights 2485.71.00750.025 | Power Line 2487.12.01000.025

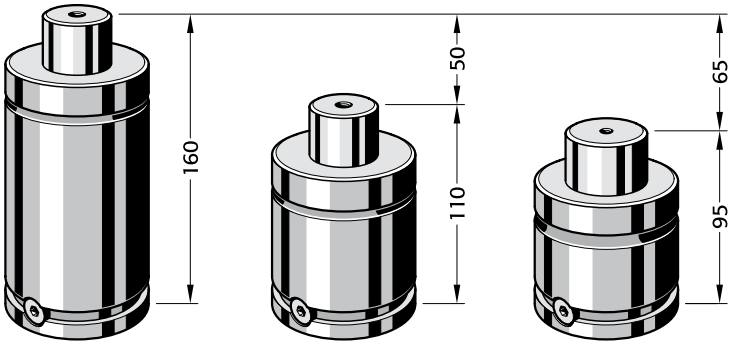

Normal construction heights 2480.12.01500.025 | Low construction heights 2485.12.01500.025 | Power Line 2487.12.02400.025

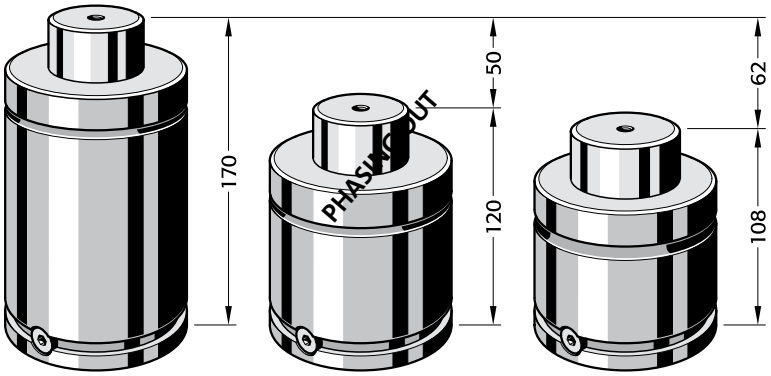

Normal construction heights 2480.13.03000.025 | Low construction heights 2485.12.03000.025 | Power Line 2487.12.04200.025

2480.011.00500

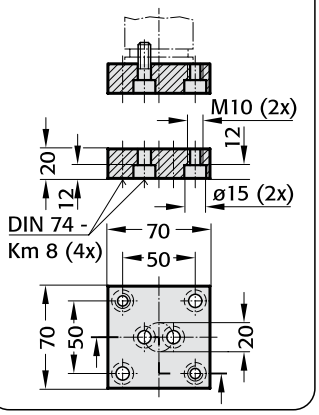

2480.011.00500.1

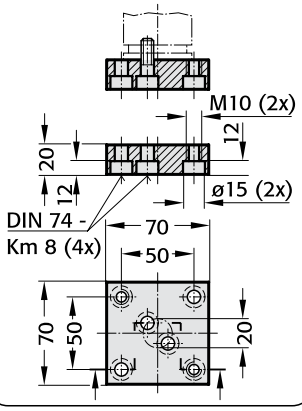

2480.022.00500

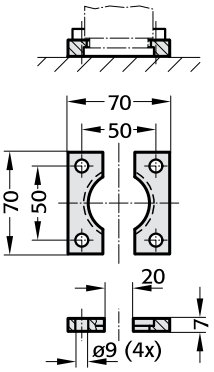

2480.055.00500

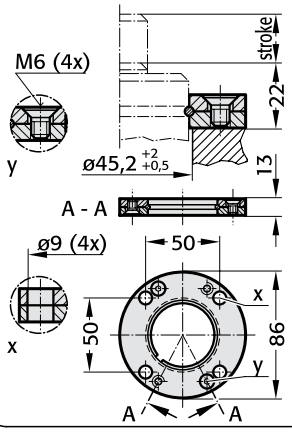

2480.057.00500

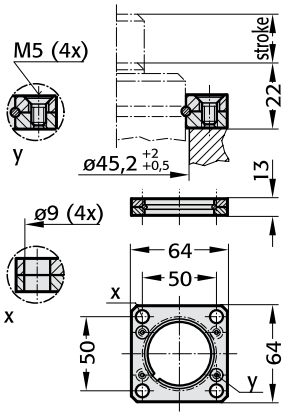

2480.007.00500

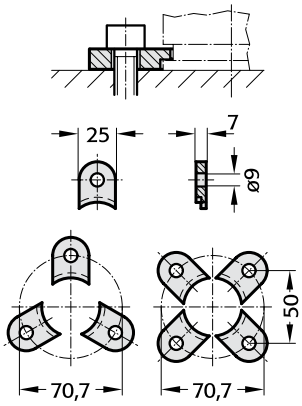

2480.008.00500[3)]

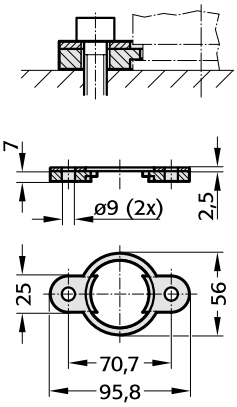

2480.044.00500[2)]

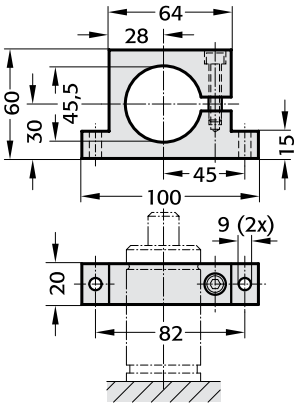

2480.010.00500.095[3)]
2480.010.00500.180*[3)]

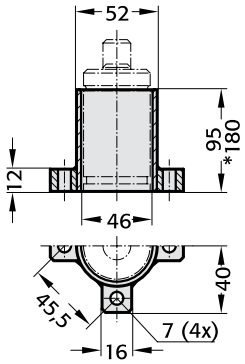

Notes:

[2)] Attention:
The spring force must be absorbed by the stop surface.

[3)] Not for use with composite connection.

FIBRO

2485.12.00500.

Gas Springs with Low Build Height

APPROVED PED 97/23/EC

2485.12.00500.

Initial spring force at 150 bar = 500 daN

Order No	stroke max.	l_{min}	l
2485.12.00500. 006	6	56	62
013	12,7	62,7	75,4
019	19	69,1	88,1
025	25	75	100
038	38,1	88,1	126,2
050	50	100	150
063	63,5	113,5	177
080	80	130	210
100	100	150	250
125	125	175	300

2485.12.00500.

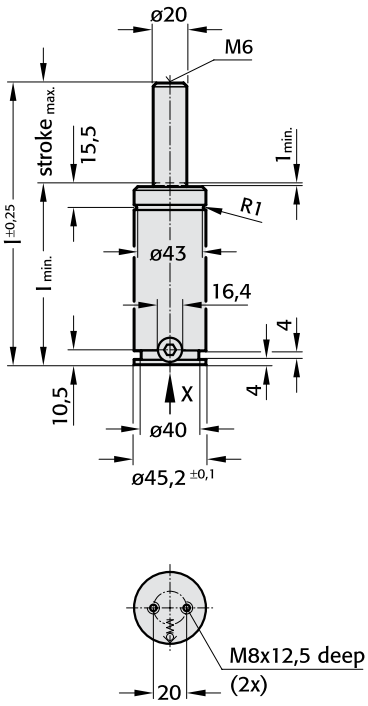

Note:

Order No for spare parts kit:
2485.12.00500

Pressure medium:	Nitrogen N_2
Max. filling pressure:	150 bar
Min. filling pressure:	50 bar
Working temperature:	0 °C to +80 °C
Temperature related force increase:	±0.3%/°C
Max. recommended extensions per minute:	approx. 40 to 80 (at 20 °C)
Max. piston speed:	1.6 m/s

2485.12.00500.

Initial spring force versus charge pressure

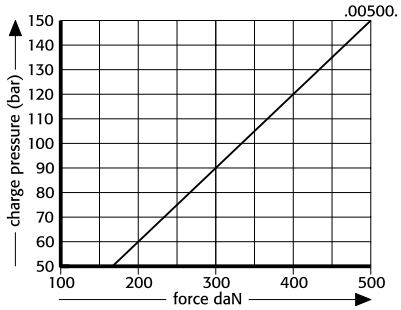

2485.12.00500.

Spring force Diagram displacement versus stroke rise

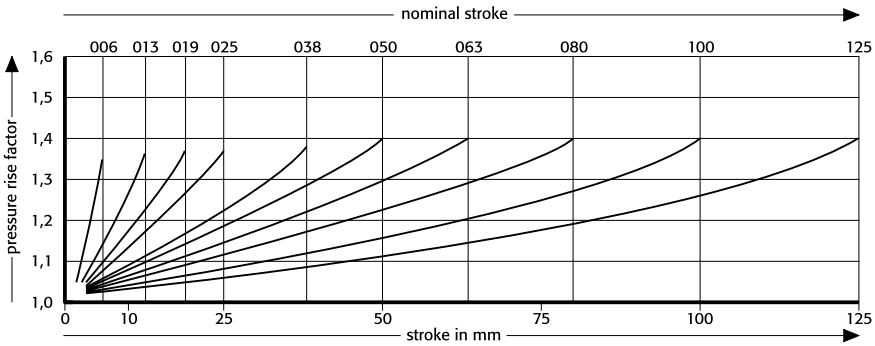

Pressure rise factor accounts for displacement but not external influences!

Gas Springs with Low Build Height Mounting Variations

FIBRO

2485.12.00750.

2480.011.00750.3

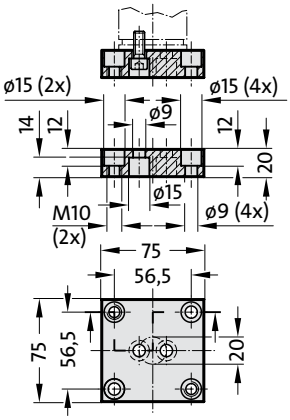

2480.011.00750

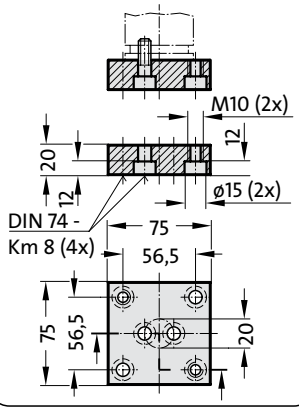

2480.011.00750.1

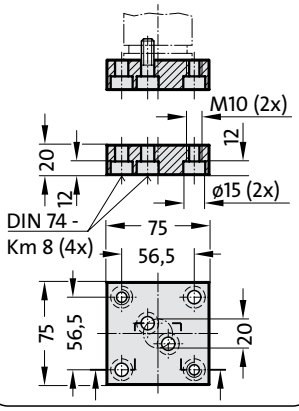

2480.022.00750

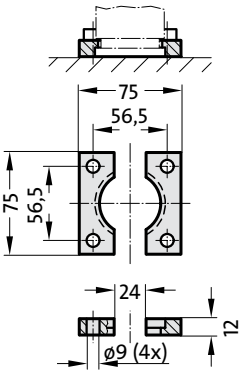

2480.055.00750

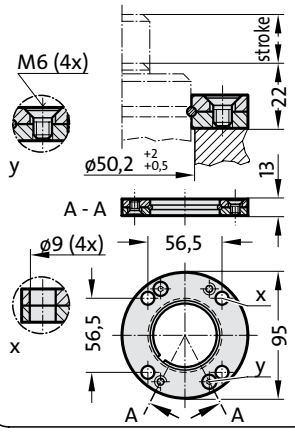

2480.057.00750

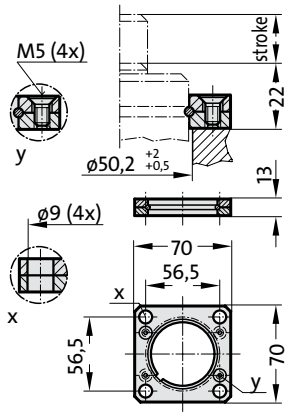

2480.007.00750

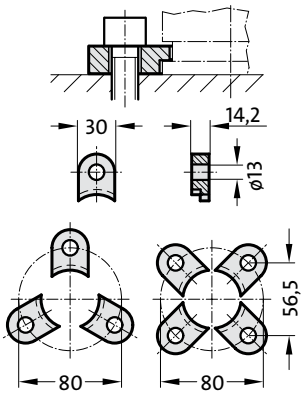

2480.008.00750 3)

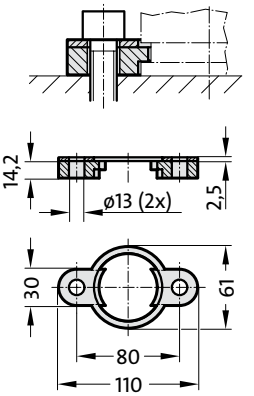

2480.064.00750 4)

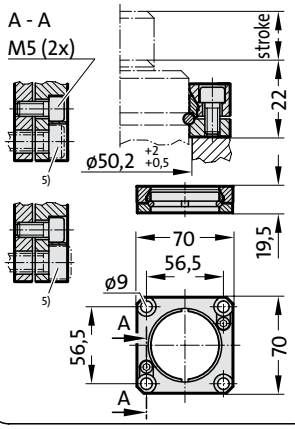

2480.044.00750 2)

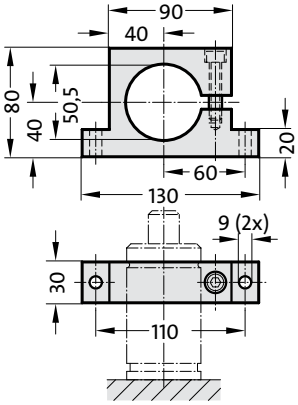

2480.010.00750.115 3)

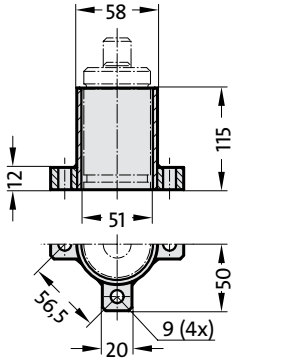

2480.045.00750 2)

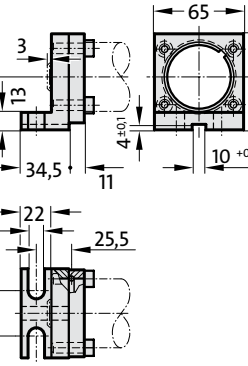

2480.047.00750 2)

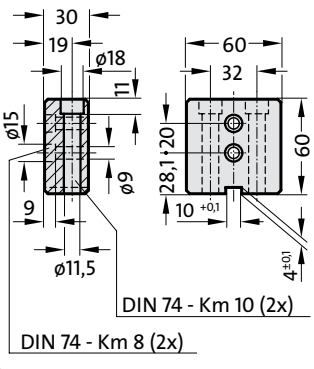

Notes:

2) Attention:
The spring force must be absorbed by the stop surface.

3) Not for use with composite connection.

4) Square collar flange, non-rotating, fixing for composite connection.

5) Machine screws with hexagonal socket (compact head recommended).

subject to alterations

FIBRO

2485.12.00750.

Gas Springs with Low Build Height

APPROVED PED 97/23/EC

2485.12.00750.

Initial spring force at 150 bar = 750 daN

Order No	stroke max.	l_{min}	l
2485.12.00750. 006	6	56	62
013	12,7	62,7	75,4
019	19	69,1	88,1
025	25	75	100
038	38,1	88,1	126,2
050	50	100	150
063	63,5	113,5	177
080	80	130	210
100	100	150	250
125	125	175	300

2485.12.00750.

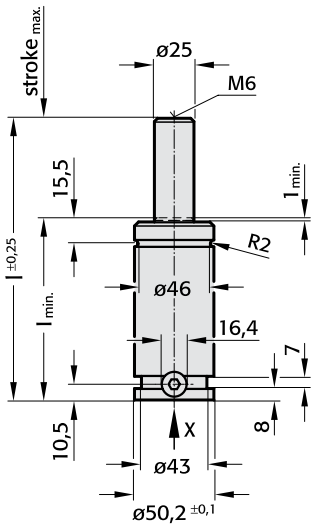

Note:

Order No for spare parts kit:
2485.12.00750

Gas spring with 2 connections (phasing out)
Ordering example:
2485.12.00750. ☐☐☐ .2

Gas spring 2485.12.00750. ☐☐☐ .2 is supplied only with 2 G1/8" threads, with 2 blanking plugs and without valve, unpressurised. This gas spring can only be used installed.

Pressure medium:	Nitrogen N_2
Max. filling pressure:	150 bar
Min. filling pressure:	25 bar
Working temperature:	0 °C to +80 °C
Temperature related force increase:	±0.3%/°C
Max. recommended extensions per minute:	approx. 15 to 40 (at 20 °C)
Max. piston speed:	1.6 m/s

View X

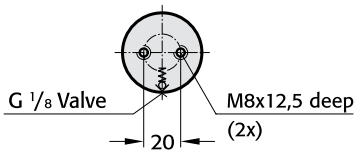

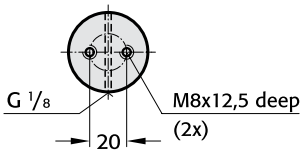

2485.12.00750.

Initial spring force versus charge pressure

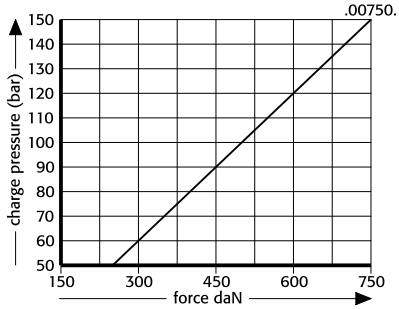

2485.12.00750.

Spring force Diagram displacement versus stroke rise

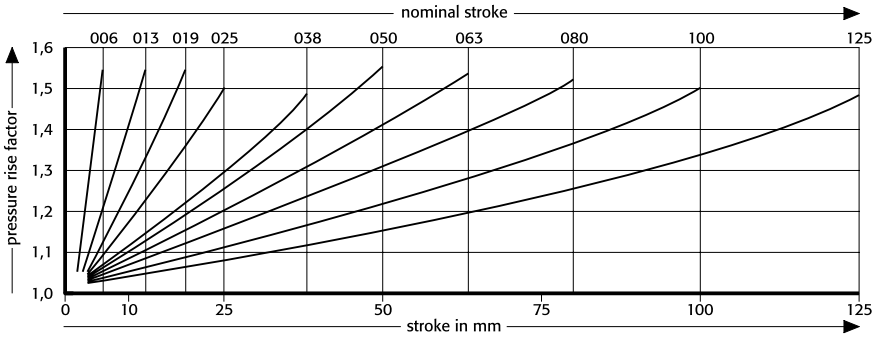

Pressure rise factor accounts for displacement but not external influences!

Gas Springs with Low Build Height Mounting Variations

FIBRO

2485.12.01500.

2480.011.01500

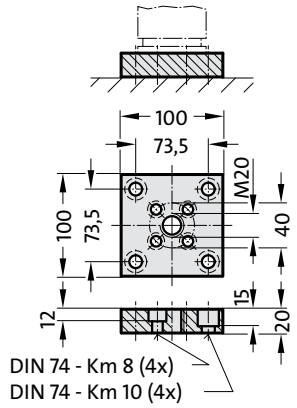

2480.011.01500.2

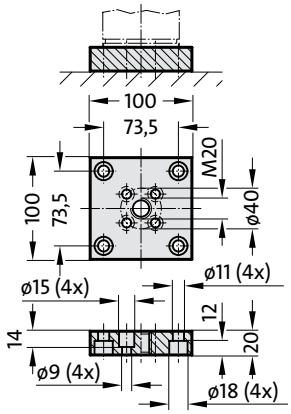

2480.022.01500

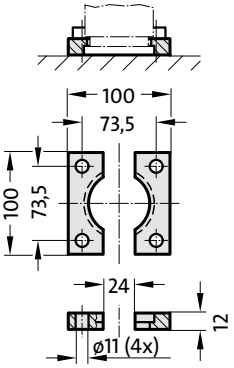

2480.058.01500

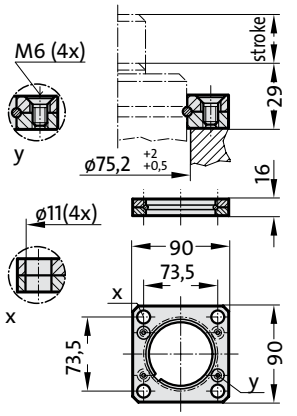

2480.007.01500

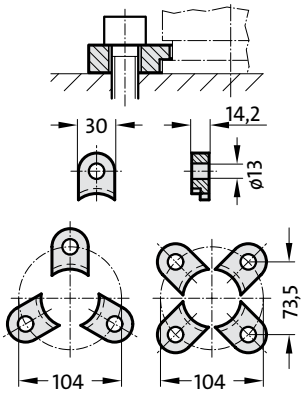

2480.064.01500 [4]

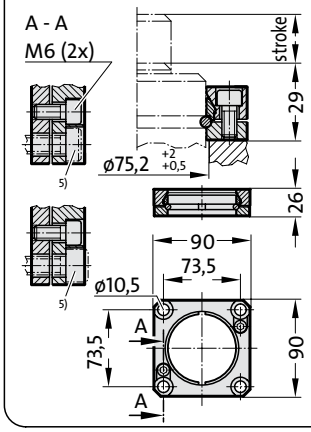

2480.044.01500 [2]

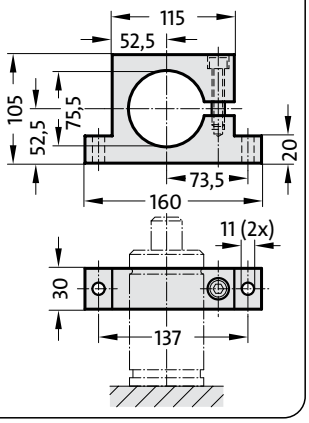

Notes:

[2] Attention:
The spring force must be absorbed by the stop surface.

[4] Square collar flange, non-rotating, fixing for composite connection.

[5] Machine screws with hexagonal socket (compact head recommended).

subject to alterations

FIBRO

2485.12.01500.

Gas Spring with Low Build Height

APPROVED PED 97/23/EC

2485.12.01500.

Initial spring force at 150 bar = 1500 daN

Order No	stroke max.	l_{min}	l
2485.12.01500. 025	25	85	110
038	38,1	98,1	136,2
050	50	110	160
063	63,5	123,5	187
080	80	140	220
100	100	160	260

2485.12.01500.

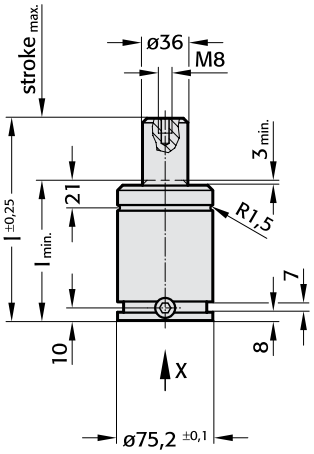

View X

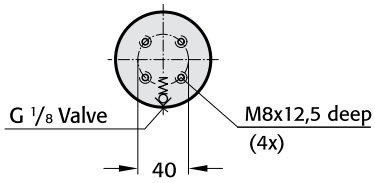

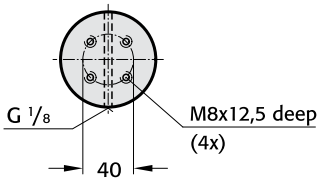

Note:

Order No for spare parts kit:
2485.12.01500

Gas spring with 2 connections (phasing out)
Ordering example:
2485.12.01500. ☐☐☐.2

Gas spring 2485.12.01500. ☐☐☐.2 is supplied only with 2 G1/8" threads, with 2 blanking plugs and without valve, unpressurised. This gas spring can only be used installed.

Pressure medium:	Nitrogen N_2
Max. filling pressure:	150 bar
Min. filling pressure:	25 bar
Working temperature:	0 °C to +80 °C
Temperature related force increase:	±0.3%/°C
Max. recommended extensions per minute:	approx. 15 to 40 (at 20 °C)
Max. piston speed:	1.6 m/s

2485.12.01500.

Initial spring force versus charge pressure

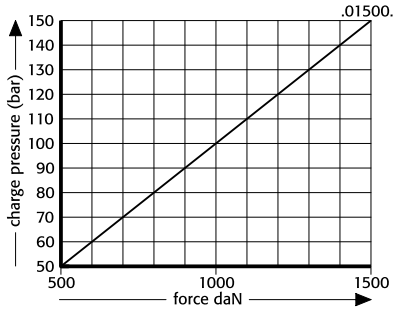

2485.12.01500.

Spring force Diagram displacement versus stroke rise

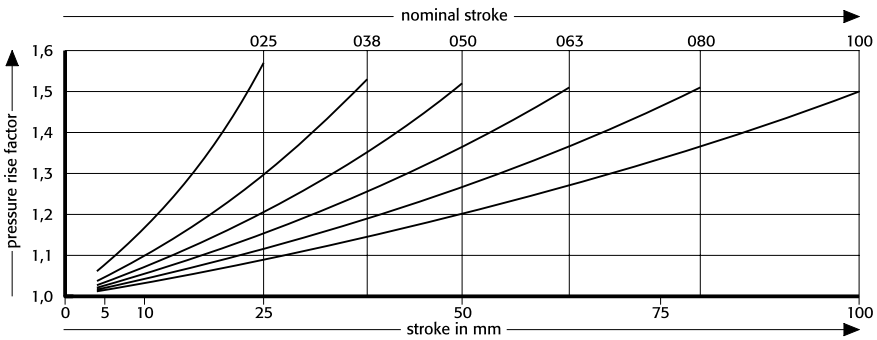

Pressure rise factor accounts for displacement but not external influences!

subject to alterations

›Speed Control™‹ SPC GAS SPRINGS, cushioned

APPROVED PED 97/23/EC

›Speed Control™‹, SPC Gas Springs, cushioned

2486.12.

Description

FIBRO SPC Gas Springs »Speed Control™« have been engineered to reduce or eliminate blank holder bounce; commonly associated with increased return stroke speeds form link drive presses.

SPC Gas Springs have inbuilt return stroke speed dampening, which decelerates the last 30 mm of piston rod stroke to 0.4 m/s, helping to bring the blank holder to a smooth stop.

Benefits of the »Speed Control™« SPC Gas Springs, cushioned:

- Eliminates blank holder bounce.
- Increases productivity by more increasing part transfer efficiency.
- Easily retrofitted to existing dies.
- Stroke lengths 125 to 300 mm.
- Linkable using hose system.

subject to alterations

Performance:

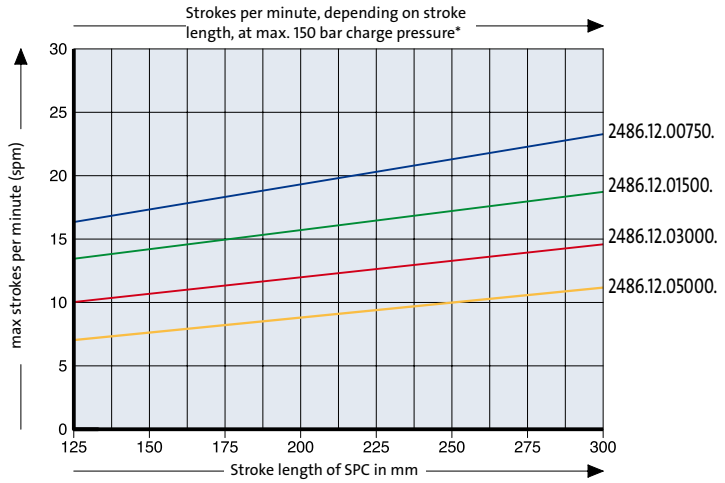

The diagram shows the max. possible number of strokes per minutes [min-1] of SPC gas springs with a max. filling pressure (150 bar) and max. used stroke lengths before there is a risk of excessive heating.

Note !

The number of strokes per minutes can be doubled by halving the initial filling pressure.

Caution !

SPC gas springs are subject to a higher heating than standard gas springs.

For this reason, please ensure adequate ventilation of the SPC gas springs in the tool.

*At ambient room temperature with free air flow

Function Example

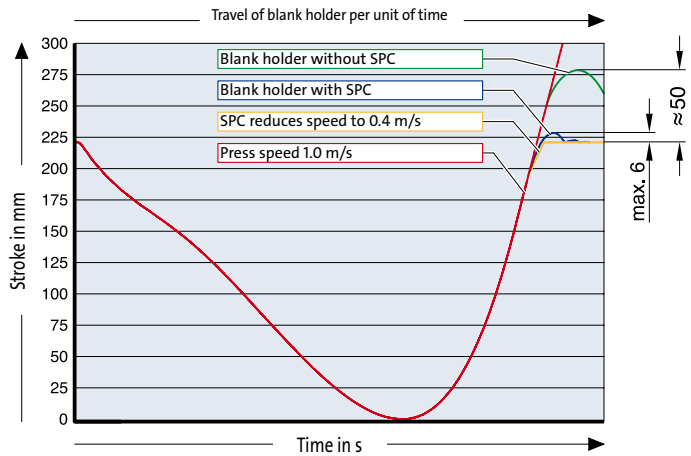

»Speed Control™« SPC Gas Springs gave a 90% reduction of blank holder bounce.

Installation

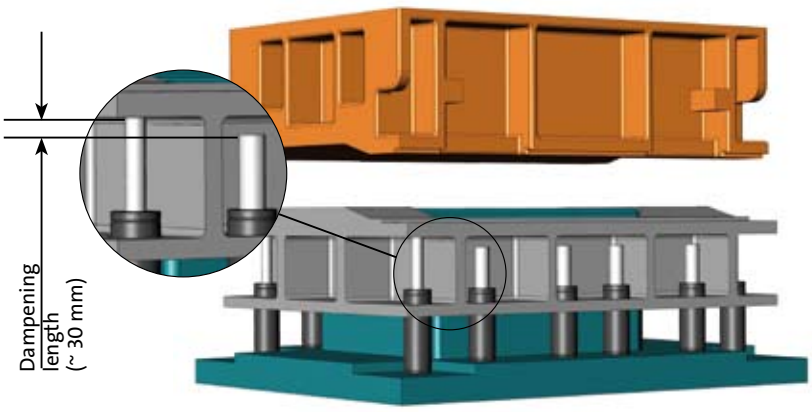

It is important that approx. 25 to 30 mm before the sheet metal retainer has reached its home position, only SPC gas springs are applied. Therefore, for the retrofitting of existing tools with SPC gas springs we recommend the following two options:

Option 1 – replace all gas springs with SPC gas springs

Option 2 – corner solution (see below)

Please note: Springs must be installed with a recess of 25 mm to balance the total length difference (2 x stroke length = 50 mm). Alternatively, the contact surface of the sheet metal retainer can be recessed in order to achieve the same effect.

››Speed Control™‹‹, SPC Gas Springs, cushioned

2486.12.00750.

2480.011.01500

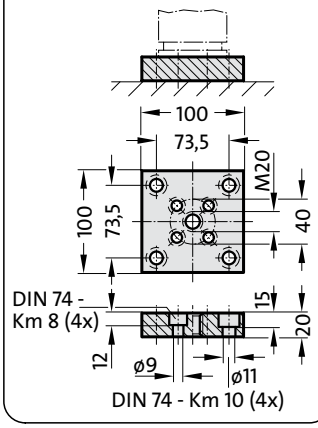

2480.011.01500.2

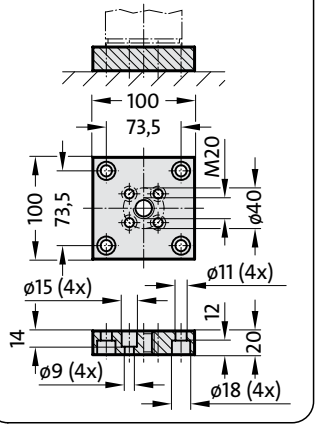

2480.022.01500

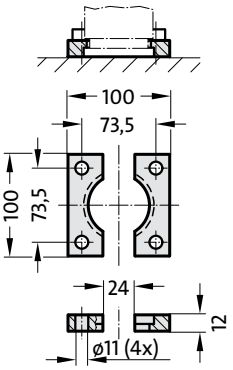

2480.055.01500

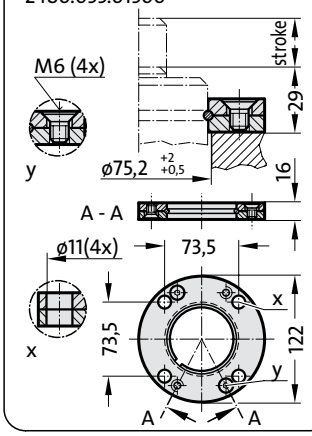

2480.057.01500

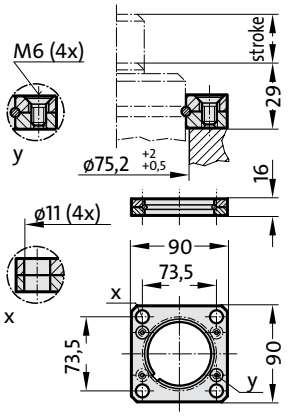

2480.007.01500

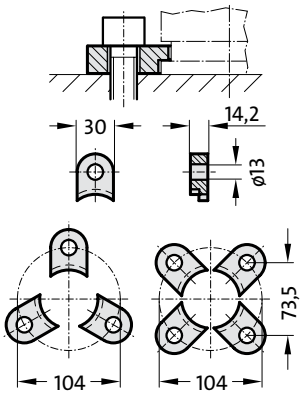

2480.008.01500 3)

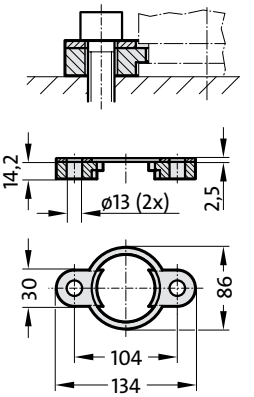

2480.064.01500 4)

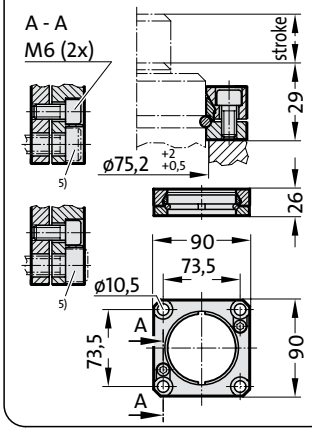

2480.044.01500 2)

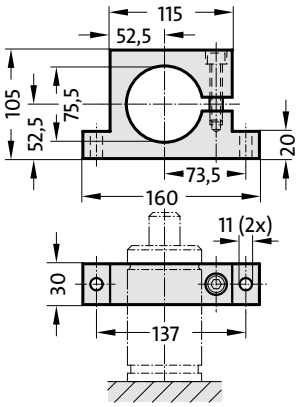

2480.045.01500 2)

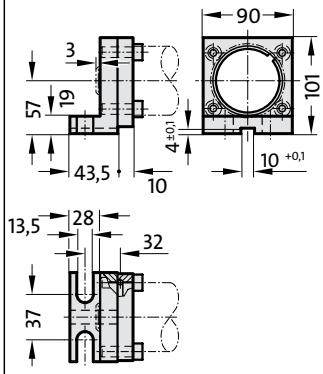

2480.047.01500 2)

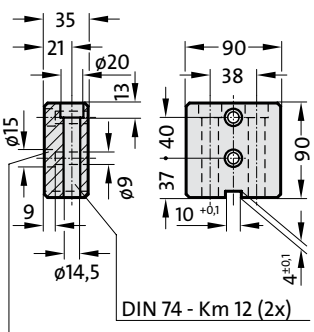

Notes:

2) Attention:
The spring force must be absorbed by the stop surface.

3) Not for use with composite connection.

4) Square collar flange, non-rotating, fixing for composite connection.

5) Machine screws with hexagonal socket (compact head recommended).

subject to alterations

FIBRO

2486.12.00750.

›Speed Control™‹, SPC Gas Springs, cushioned

APPROVED PED 97/23/EC

2486.12.00750.

Initial spring force at 150 bar = 750 daN

Order No	stroke max.	l_{min}	l
2486.12.00750. 125	125	235	360
160	160	270	430
200	200	310	510
250	250	360	610
300	300	410	710

2486.12.00750.

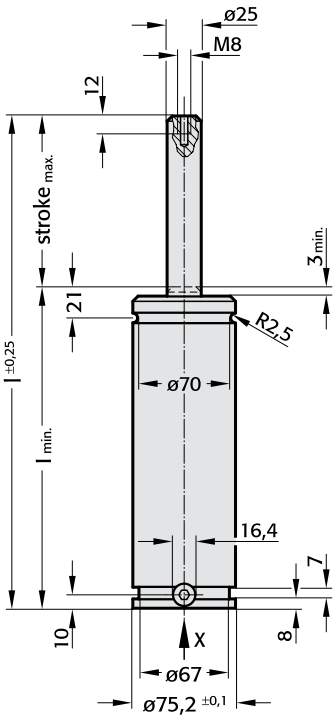

View X

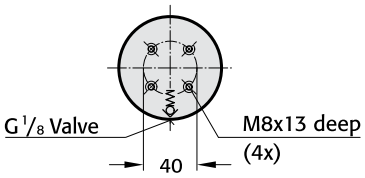

Note:

Order No for spare parts kit:
2486.12.00750

Pressure medium:	Nitrogen N_2
Max. filling pressure:	150 bar
Min. filling pressure:	25 bar
Working temperature:	0 °C to +80 °C
Temperature related force increase:	±0.3%/°C
Recommended max. strokes/min:	approx. 16 to 24 (at 20°C)
Dampening length:	~ 30 mm
Piston rod speed, decelerated:	0.4 m/s

2486.12.00750.

Initial spring force versus charge pressure

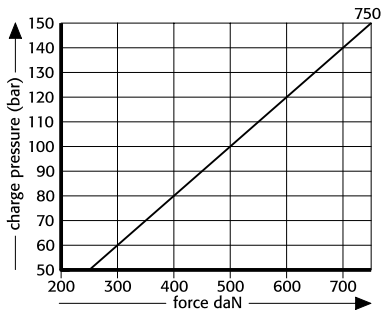

2486.12.00750.

Spring force Diagram displacement versus stroke rise

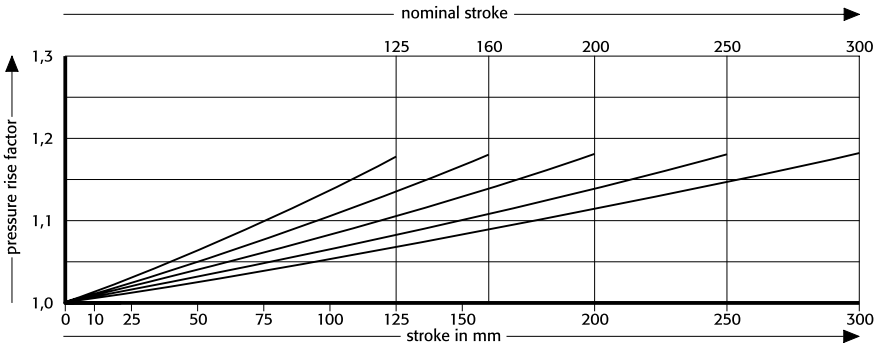

Pressure rise factor accounts for displacement but not external influences!

››Speed Control™‹‹, SPC Gas Springs, cushioned

2486.12.01500.

2480.011.03000

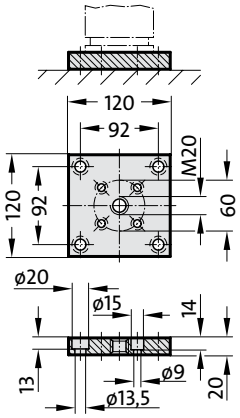

2480.011.03000.2

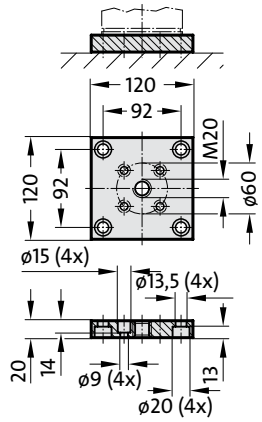

2480.022.03000

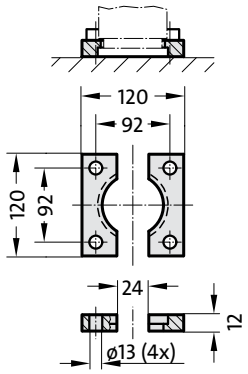

2480.055.03000

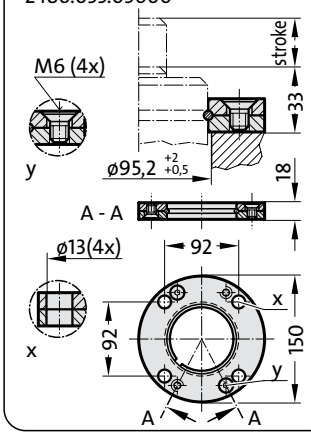

2480.057.03000

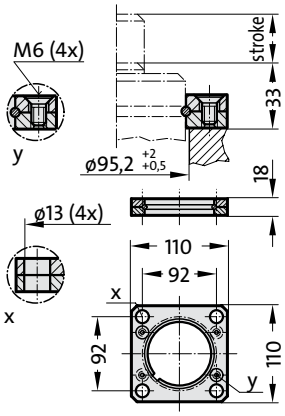

2480.007.03000

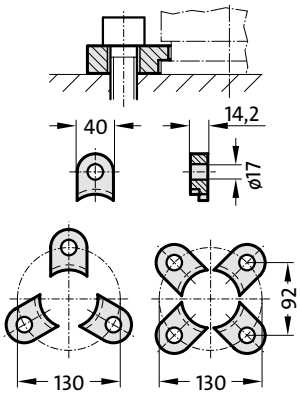

2480.008.03000 3)

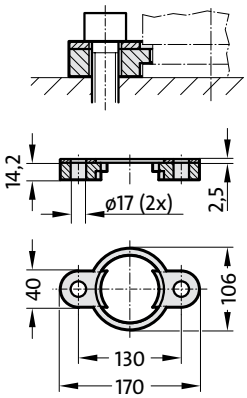

2480.064.03000 4)

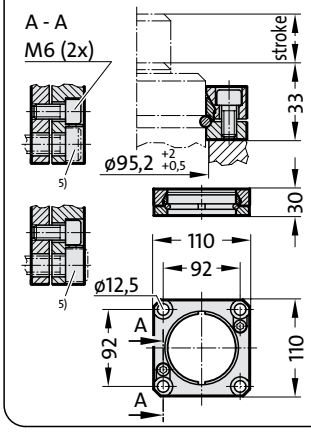

2480.044.03000 2)

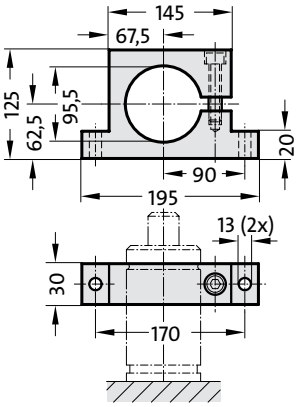

2480.045.03000 2)

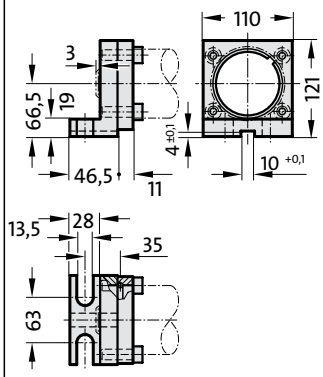

2480.047.03000 2)

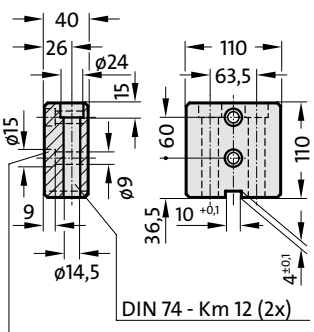

Notes:

2) Attention:
The spring force must be absorbed by the stop surface.

3) Not for use with composite connection.

4) Square collar flange, non-rotating, fixing for composite connection.

5) Machine screws with hexagonal socket (compact head recommended).

subject to alterations

FIBRO

2486.12.01500.

›Speed Control™‹, SPC Gas Springs, cushioned

APPROVED PED 97/23/EC

2486.12.01500.

Initial spring force at 150 bar = 1500 daN

Order No	stroke max.	l_{min}	l
2486.12.01500. 125	125	245	370
160	160	280	440
200	200	320	520
250	250	370	620
300	300	420	720

2486.12.01500.

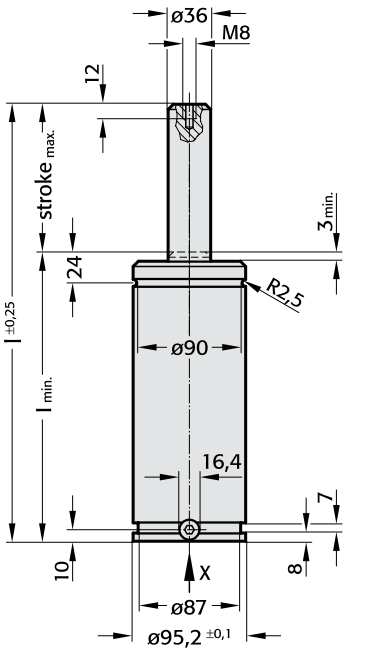

View X

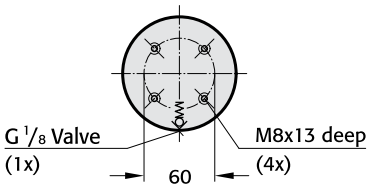

Note:

Order No for spare parts kit:
2486.12.01500

Pressure medium:	Nitrogen N_2
Max. filling pressure:	150 bar
Min. filling pressure:	25 bar
Working temperature:	0 °C to +80 °C
Temperature related force increase:	±0.3%/°C
Recommended max. strokes/min:	approx. 14 to 19 (at 20°C)
Dampening length:	~ 30 mm
Piston rod speed, decelerated:	0.4 m/s

2486.12.01500.

Initial spring force versus charge pressure

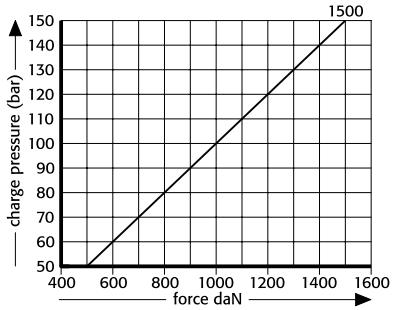

2486.12.01500.

Spring force Diagram displacement versus stroke rise

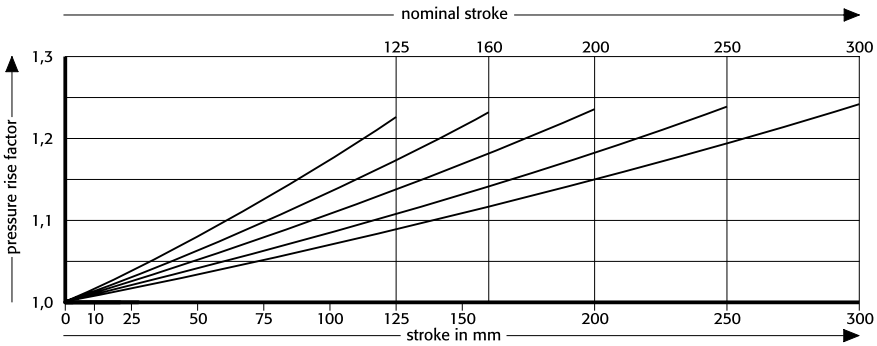

Pressure rise factor accounts for displacement but not external influences!

››Speed Control™‹‹, SPC Gas Springs, cushioned

2486.12.03000.

2480.011.05000

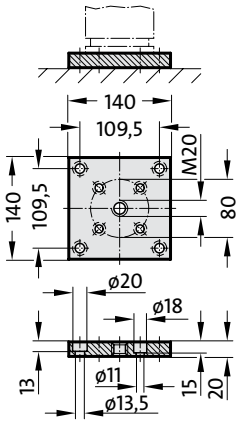

2480.011.05000.2

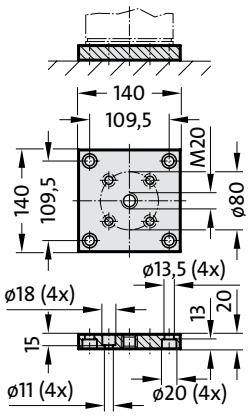

2480.022.05000

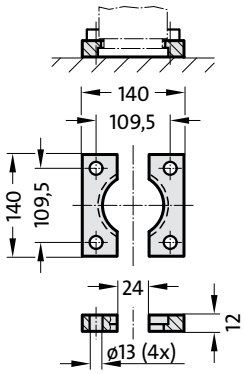

2480.055.05000

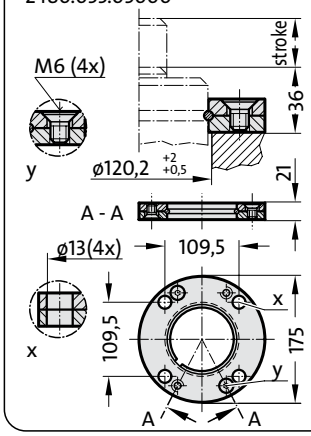

2480.057.05000

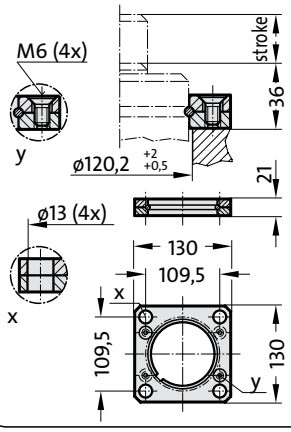

2480.007.05000

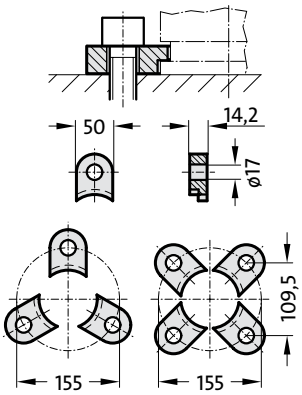

2480.008.05000 3)

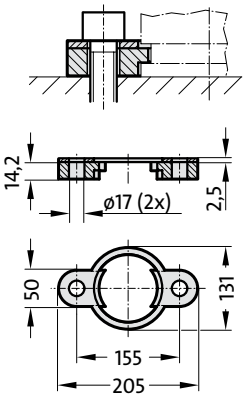

2480.064.05000 4)

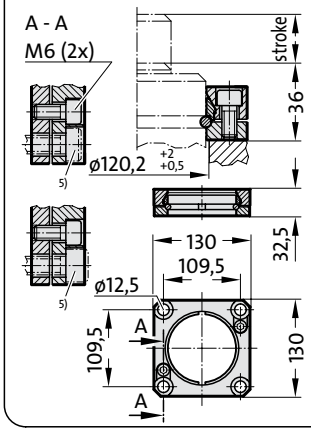

2480.044.05000 2)

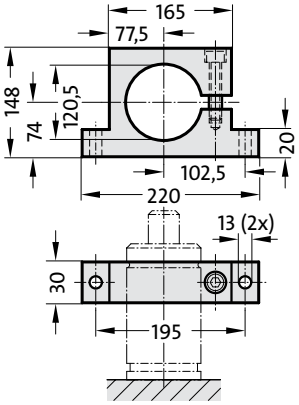

2480.045.05000 2)

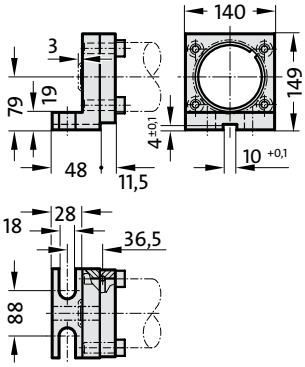

2480.047.05000 2)

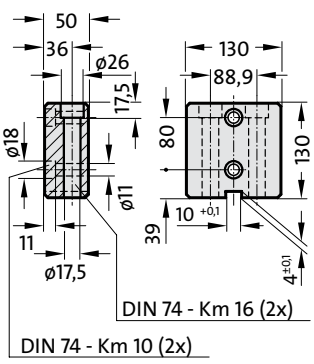

Notes:

2) Attention:
The spring force must be absorbed by the stop surface.

3) Not for use with composite connection.

4) Square collar flange, non-rotating, fixing for composite connection.

5) Machine screws with hexagonal socket (compact head recommended).

subject to alterations

FIBRO

2486.12.03000.

›Speed Control™‹, SPC Gas Springs, cushioned

APPROVED PED 97/23/EC

2486.12.03000.

Initial spring force at 150 bar = 3000 daN

Order No	stroke max.	l_{min}	l
2486.12.01500. 125	125	265	390
160	160	300	460
200	200	340	540
250	250	390	640
300	300	440	740

2486.12.03000.

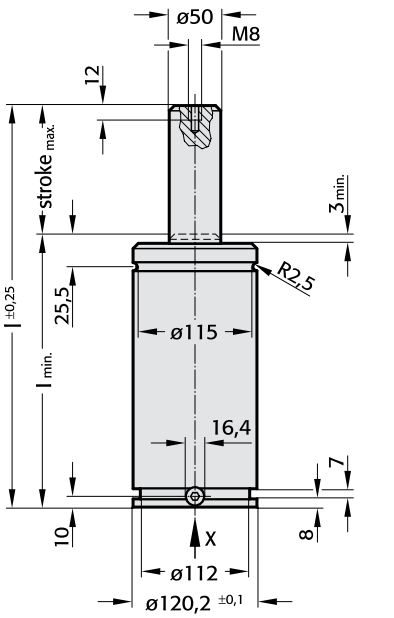

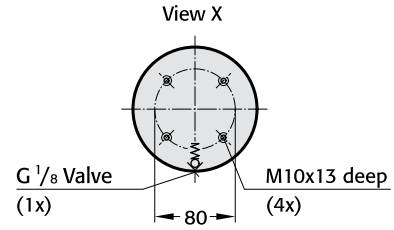

Note:

Order No for spare parts kit:
2486.12.03000

Pressure medium:	Nitrogen N_2
Max. filling pressure:	150 bar
Min. filling pressure:	25 bar
Operating temperature:	0 °C to +80 °C
Temperature related force increase:	±0.3%/°C
Recommended max. strokes/min:	approx. 10 to 13 (at 20°C)
Dampening length:	~ 30 mm
Piston rod speed, decelerated:	0.4 m/s

2486.12.03000.

Initial spring force versus charge pressure

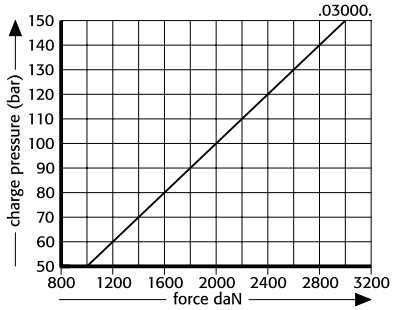

2486.12.03000.

Spring force Diagram displacement versus stroke rise

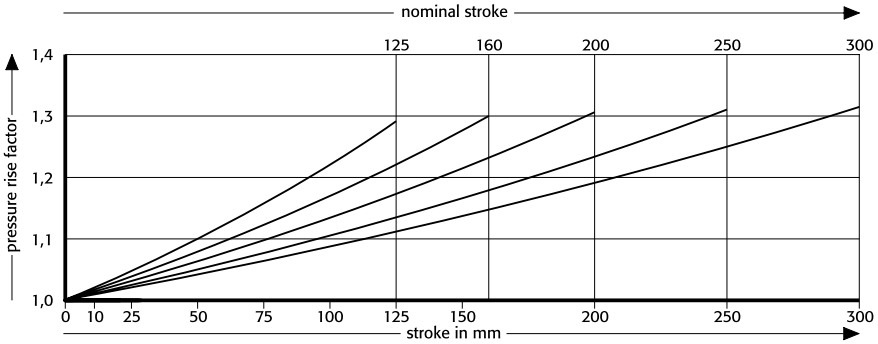

Pressure rise factor accounts for displacement but not external influences!

››Speed Control™‹‹
SPC Gas Springs, cushioned

2486.12.05000.

2480.011.07500

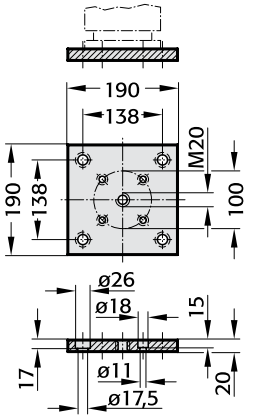

2480.022.07500

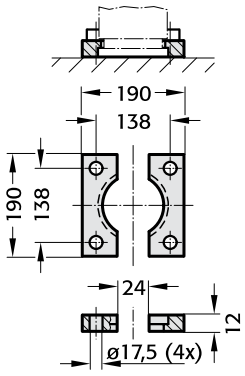

2480.055.07500

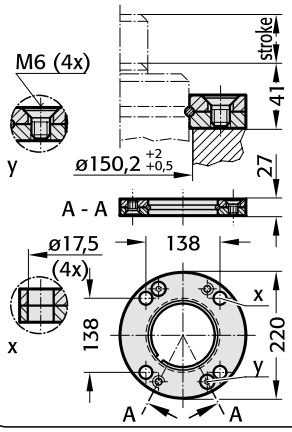

2480.057.07500

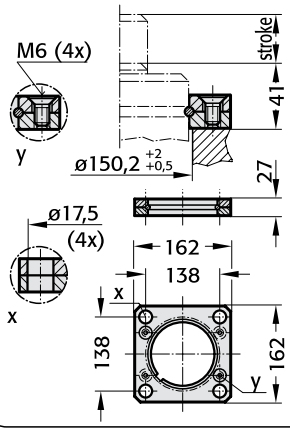

2480.007.07500

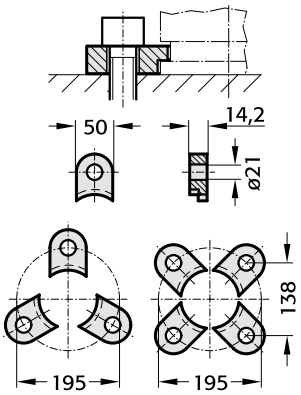

2480.008.07500 [3]

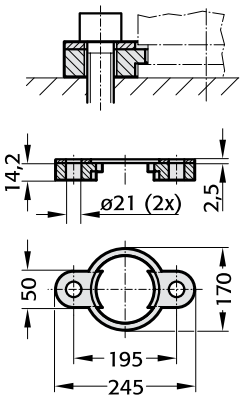

2480.064.07500 [4]

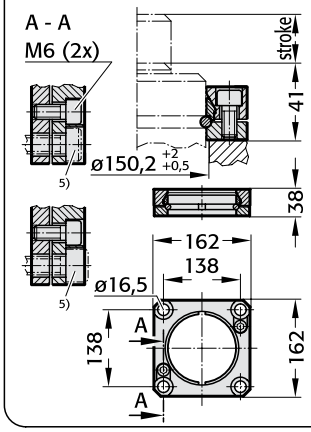

2480.044.07500 [2]

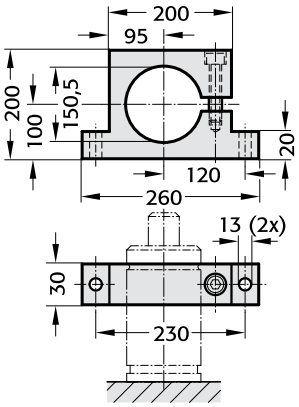

Notes:

[2] Attention:
The spring force must be absorbed by the stop surface.

[3] Not for use with composite connection.

[4] Square collar flange, non-rotating, fixing for composite connection.

[5] Machine screws with hexagonal socket (compact head recommended).

subject to alterations

FIBRO

2486.12.05000.

›Speed Control™‹, SPC Gas Springs, cushioned

APPROVED PED 97/23/EC

2486.12.05000.

Initial spring force at 150 bar = 5000 daN

Order No	stroke max.	l_{min}	l
2486.12.01500. 125	125	280	405
160	160	315	475
200	200	355	555
250	250	405	655
300	300	455	755

2486.12.05000.

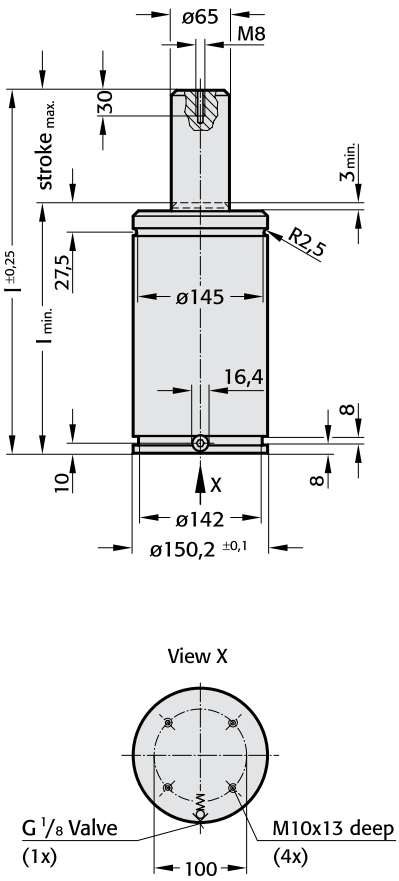

Note:

Order No for spare parts kit:
2486.12.05000

Pressure medium:	Nitrogen N_2
Max. filling pressure:	150 bar
Min. filling pressure:	25 bar
Operating temperature:	0 °C to +80 °C
Temperature related force increase:	±0.3%/°C
Recommended max. strokes/min:	approx. 6 to 11 (at 20°C)
Dampening length:	~ 30 mm
Piston rod speed, decelerated:	0.4 m/s

2486.12.05000.

Initial spring force versus charge pressure

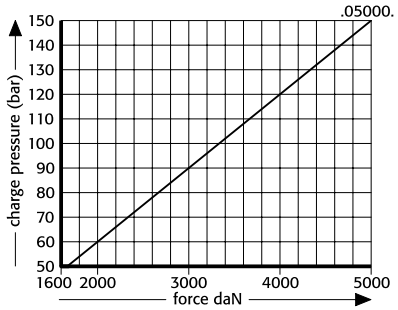

2486.12.05000.

Spring force Diagram displacement versus stroke rise

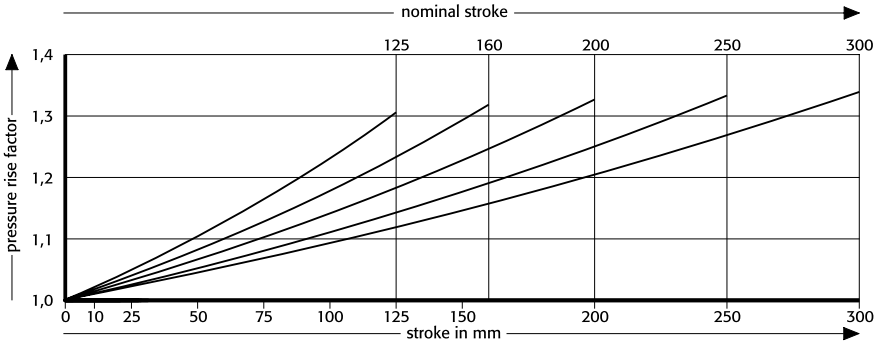

Pressure rise factor accounts for displacement but not external influences!

subject to alterations

Gas Springs with Fastening to Ford Standard WDX

APPROVED PED 97/23/EC

Please request your catalogue

subject to alterations

Gas Springs, threaded

2480.005.00200

Slotted nut

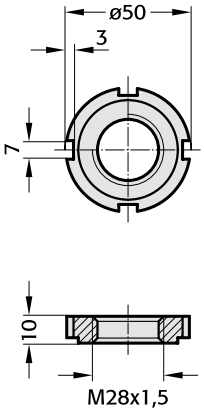

Mounting example:

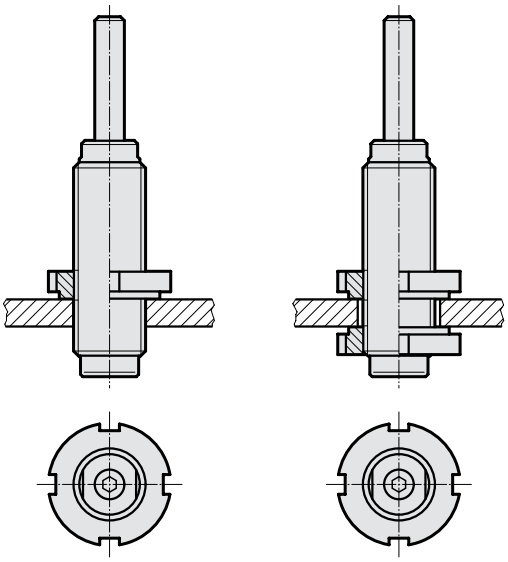

FIBRO

2480.32.

Gas Springs with external thread small dimensions and low forces

APPROVED PED 97/23/EC

2480.32.00050.
00100.
00150.
00200.

Order No	stroke max.	$l_{min.}$	l
2480.32. .010	10	52	62
013	12,7	54,7	67,4
016	16	58	74
025	25	67	92
038	38,1	80,1	118,2
050	50	92	142
063	63,5	105,5	169
080	80	122	202
100	100	142	242
125	125	167	292

Order No for spare parts kit: 2480.21.00150

2480.32.

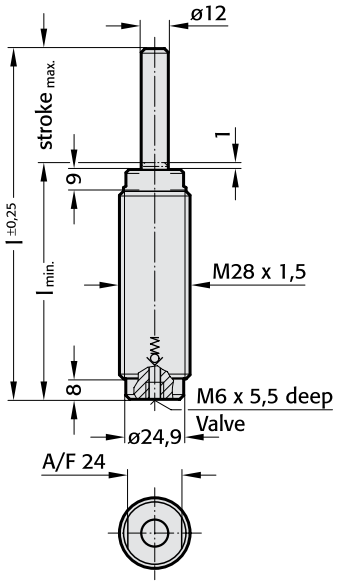

Springs Force Colour Markings

Order No	Initial spring force daN	pressure bar	Colour
2480.32. 00050	50	45	green
00100.	100	90	blue
00150.	150	135	red
00200.	200	180	yellow
00000.*			black

*As required by customer.
Can also be supplied unfilled.

Pressure medium:	Nitrogen N2
Max. filling pressure:	180 bar
Min. filling pressure:	25 bar
Working temperature:	0°C to +80°C
Temperature related force increase:	±0.3%/°C
Max. recommended extensions per min.:	approx. 80 to 100 (at 20°C)
Max. piston speed:	1.6 m/s

2480.32.

Initial spring force versus charge pressure

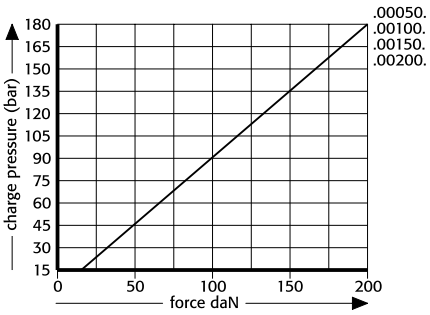

2480.32.

Spring force Diagram displacement versus stroke rise

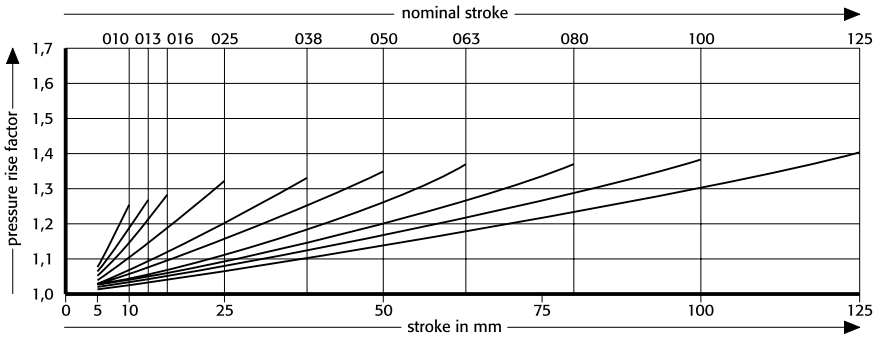

Pressure rise factor accounts for displacement but not external influences!

2480.005.00250

Slotted nut

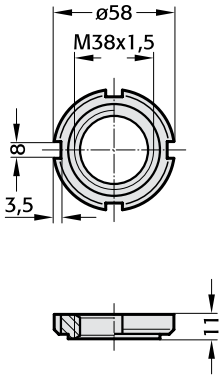

2480.006.00250

Clamped flange

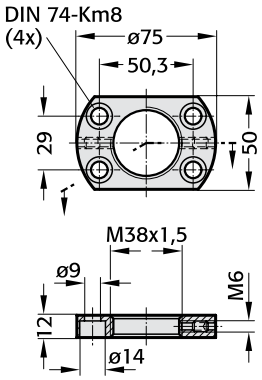

2480.00.51.01

Box spanner for assembling/disassembling of gas springs

Mounting example:

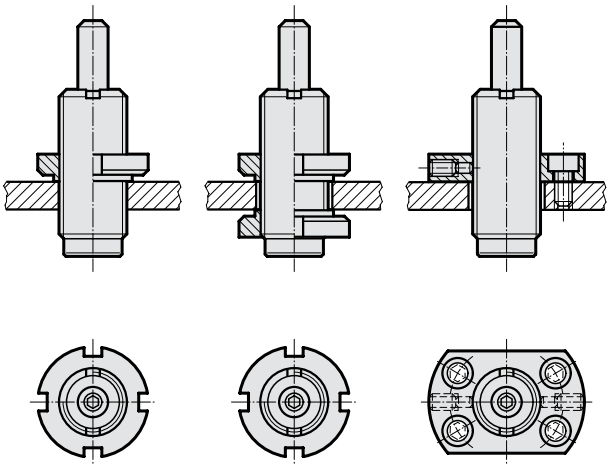

FIBRO

2480.32.00250.

Gas Springs with external thread

APPROVED PED 97/23/EC

2480.32.

Initial spring force at 150 bar = 250 daN

Order No		stroke max.	$l_{min.}$	l
2480.32.00250.	013	12,7	62,7	75,4
	025	25	75	100
	038	38,1	88,1	126,2
	050	50	100	150
	063	63,5	113,5	177
	080	80	130	210
	100	100	150	250

Order No for spare parts kit: 2480.12.00250

Pressure medium:	Nitrogen N2
Max. filling pressure:	150 bar
Min. filling pressure:	50 bar
Working temperature:	0°C to +80°C
Temperature related force increase:	±0.3%/°C
Max. recommended extensions per min.:	approx. 80 to 100 (at 20°C)
Max. piston speed:	1.6 m/s

2480.32.00250.

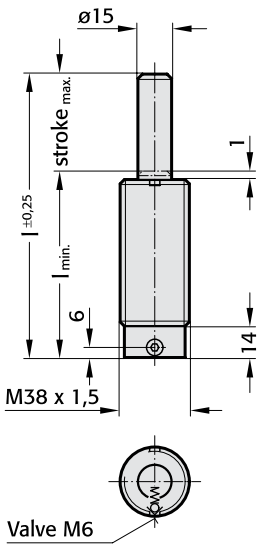

Installation with ring nut(s) 2480.005.00250 can be done with one or two ring nuts. If the hole in the bolster plate is not threaded, two ring nuts are needed. Holes threaded M 38 × 1,5 require one only ring nut for mounting of the Gas Springs.

Mounting with a threaded flange plate has the advantage of a degree of adjustability as far as the flange screws permit, Moreover it is often found easier to make do with a clearance hole in the tool plate. Locking is by way of two lock screws with thrust plugs, provided in the threaded flange.

Diameter of through-hole in tool plate = 38 mm – plus four tapped holes M 8.

2480.32.00250.

Initial spring force versus charge pressure

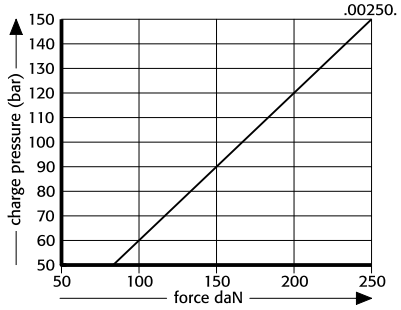

2480.32.00250.

Spring force Diagram displacement versus stroke rise

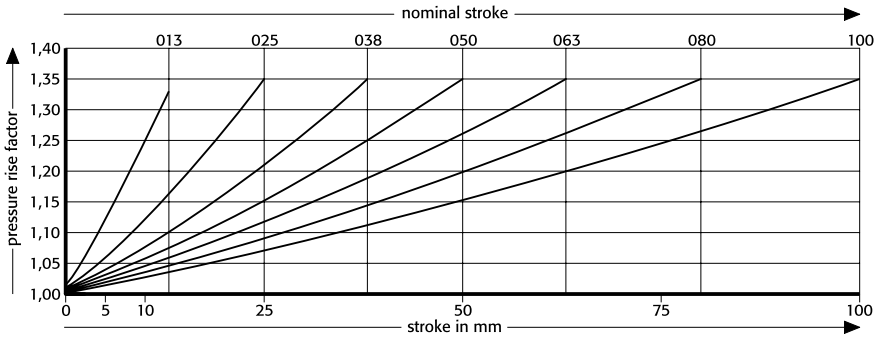

Pressure rise factor accounts for displacement but not external influences!

2480.005.00250

Slotted nut

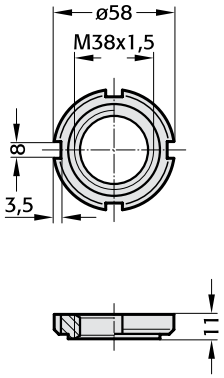

2480.006.00250

Clamped flange

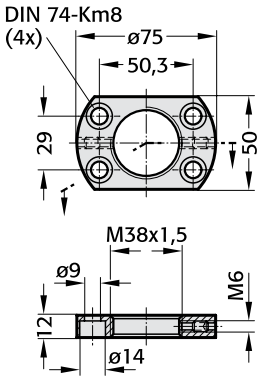

Secured by two special pins
with setscrews

2480.00.51.01

Box spanner for assembling/disassembling
of gas springs

Mounting example:

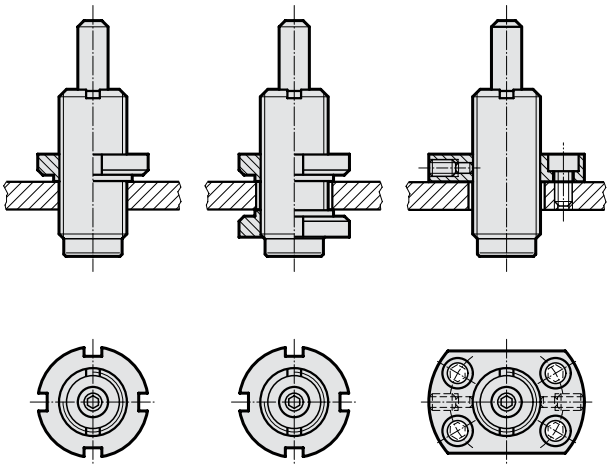

FIBRO

2485.31.00250.

Gas Springs with external thread, low build height

APPROVED PED 97/23/EC

2485.31.00250.

Initial spring force at 150 bar = 250 daN

Order No	stroke max.	$l_{min.}$	l
2485.31.00250.013	12,7	42,7	55,4
015	15	45	60
025	25	55	80
038	38,1	68,1	106,2
050	50	80	130
063	63,5	93,5	157
080	80	110	190
100	100	130	230

Order No for pare parts kit: 2485.71.00250

2485.31.00250.

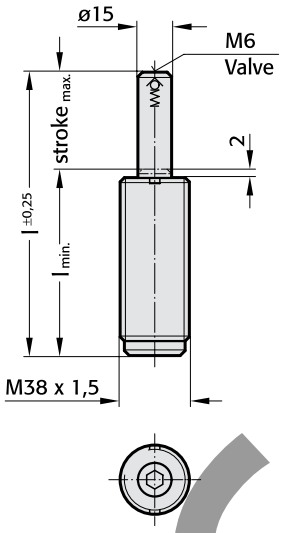

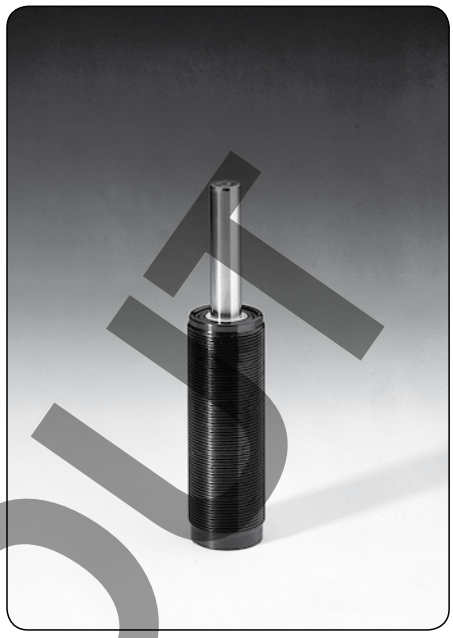

Pressure medium:	Nitrogen N2
Max. filling pressure:	150 bar
Min. filling pressure:	50 bar
Working temperature:	0°C to +80°C
Temperature related force increase:	±0.3%/°C
Max. recommended extensions per min.:	approx. 80 to 100 (at 20°C)
Max. piston speed:	1.6 m/s

2485.31.00250.

Initial spring force versus charge pressure

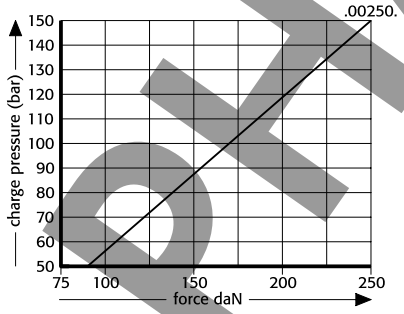

2485.31.00250.

Spring force Diagram displacement versus stroke rise

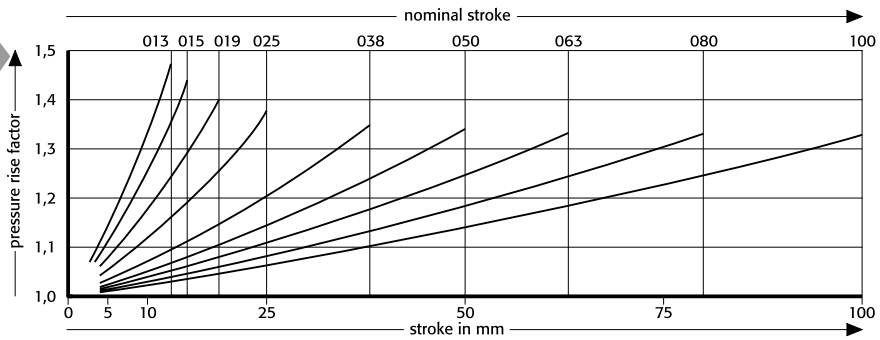

Pressure rise factor accounts for displacement but not external influences!

PHASING OUT

2480.005.00500

Slotted nut

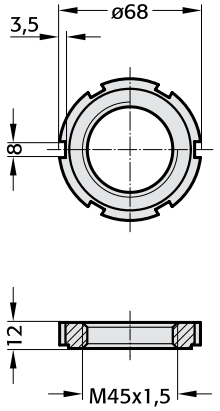

2480.00.51.03

Box spanner for assembling/disassembling of gas springs

Mounting example:

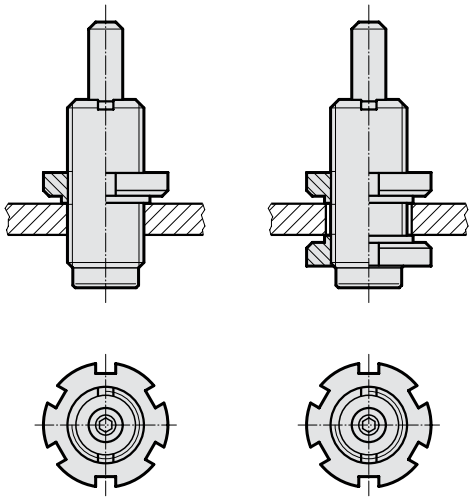

FIBRO

2485.31.00500.

Gas Springs with external thread, low build height

APPROVED PED 97/23/EC

2485.31.00500.

Initial spring force at 150 bar = 500 daN

Order No	stroke max.	$l_{min.}$	l
2485.31.00500.013	12,7	44,7	57,4
019	19	51,1	70,1
025	25	57	82
038	38,1	70,1	108,2
050	50	82	132
063	63,5	95,5	159
080	80	112	192
100	100	132	232
125	125	157	282

Order No for spare parts kit: 2485.12.00500

2485.31.00500.

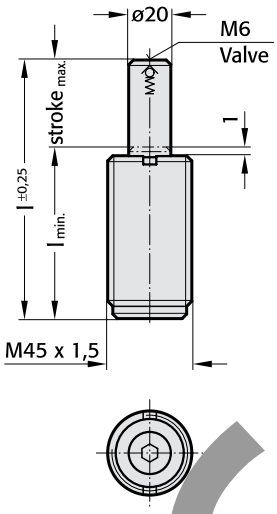

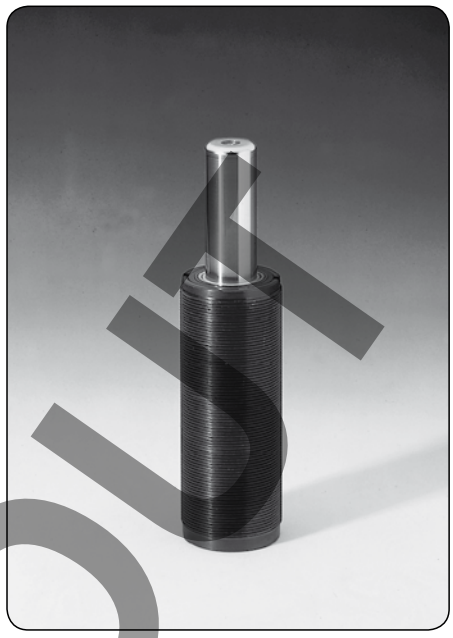

Pressure medium:	Nitrogen N2
Max. filling pressure:	150 bar
Min. filling pressure:	50 bar
Working temperature:	0°C to +80°C
Temperature related force increase:	±0.3%/°C
Max. recommended extensions per min.:	approx. 40 to 80 (at 20°C)
Max. piston speed:	1.6 m/s

2485.31.00500.

Initial spring force versus charge pressure

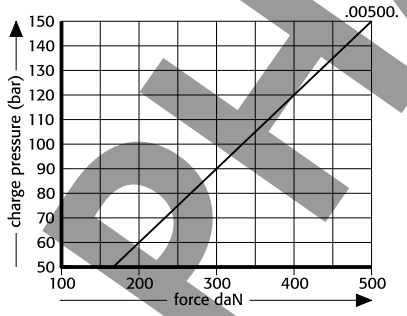

2485.31.00500.

Spring force Diagram displacement versus stroke rise

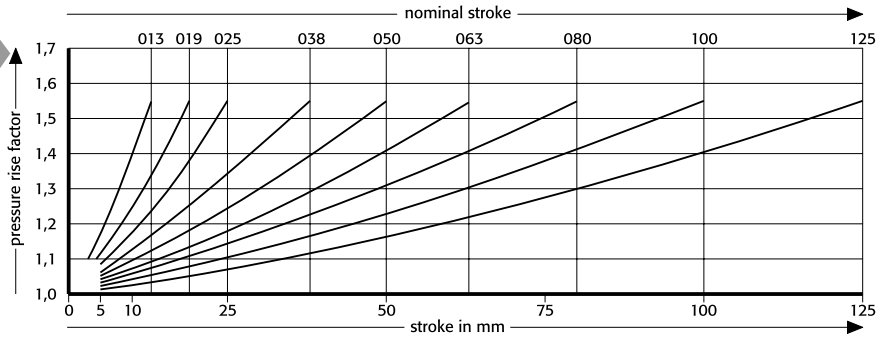

Pressure rise factor accounts for displacement but not external influences!

PHASING OUT

2480.005.00750

Slotted nut

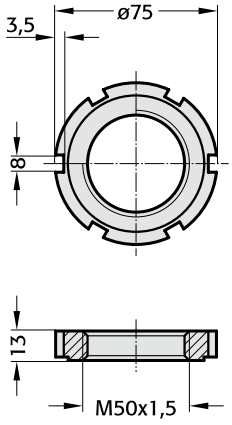

2480.006.00750

Clamping flange

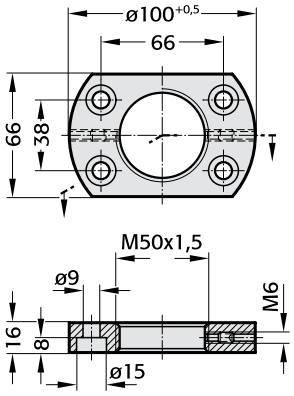

2480.00.51.04

Box spanner for assembling/disassembling of gas springs

Mounting example:

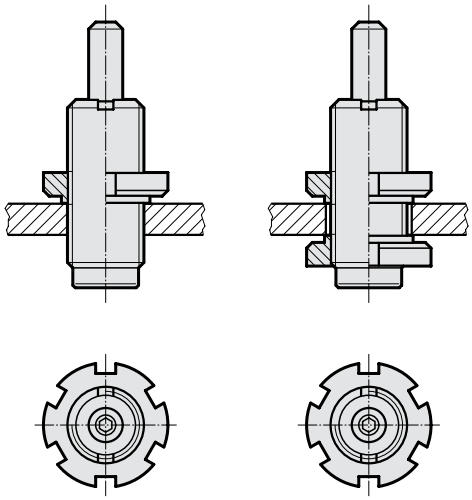

FIBRO

2485.31.00750.

Gas Springs with external thread, low build height

APPROVED PED 97/23/EC

2485.31.00750.

Initial spring force at 150 bar = 750 daN

Order No	Stroke max.	$l_{min.}$	l
2485.31.00750.013	12,7	50,7	63,4
019	19	57,1	76,1
025	25	63	88
038	38,1	76,1	114,2
050	50	88	138
063	63,5	101,5	165
080	80	118	198
100	100	138	238
125	125	163	288

Order No for spare parts kit: 2485.12.00750

2485.31.00750.

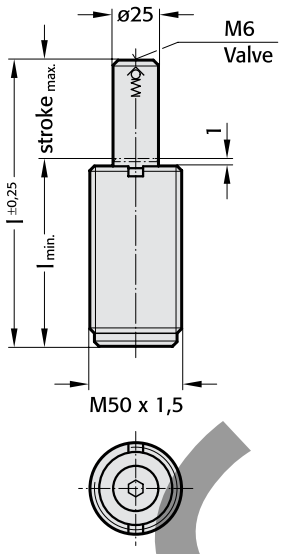

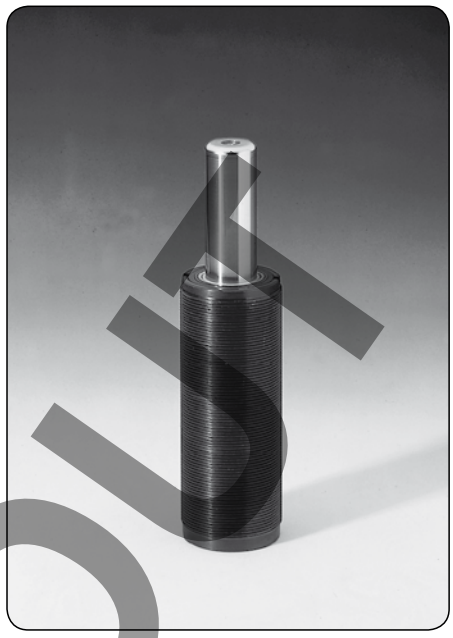

Pressure medium:	Nitrogen N2
Max. filling pressure:	150 bar
Min. filling pressure:	25 bar
Working temperature:	0°C to +80°C
Temperature related force increase:	±0.3%/°C
Max. recommended extensions per min.:	approx. 15 to 40 (at 20°C)
Max. piston speed:	1.6 m/s

2485.31.00750.

Initial spring force versus charge pressure

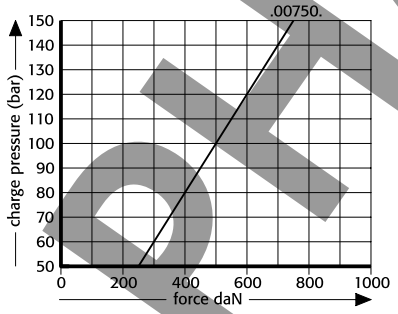

2485.31.00750.

Spring force Diagram displacement versus stroke rise

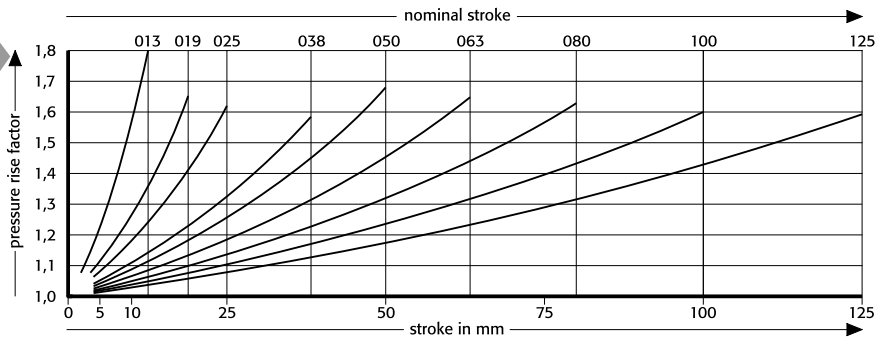

Pressure rise factor accounts for displacement but not external influences!

PHASING OUT

2480.00.51.01

Box spanner for assembling/disassembling of gas springs

Mounting example:

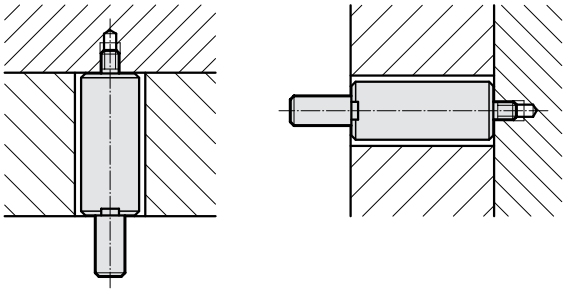

FIBRO

2480.82.00250.

Gas Springs with male fixing thread small dimensions

APPROVED PED 97/23/EC

2480.82.00250.

Initial spring force at 150 bar = 250 daN

Order No	stroke max.	$l_{min.}$	l
2480.82.00250.013	12,7	62,7	75,4
025	25	75	100
038	38,1	88,1	126,2
050	50	100	150
063	63,5	113,5	177
080	80	130	210
100	100	150	250

Order No for spare parts kit: 2480.12.00250

2480.82.00250.

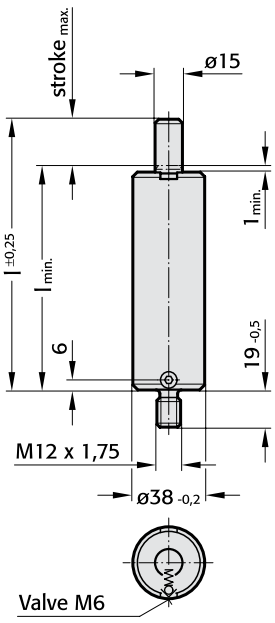

Pressure medium:	Nitrogen N2
Max. filling pressure:	150 bar
Min. filling pressure:	50 bar
Working temperature:	0°C to +80°C
Temperature related force increase:	±0.3%/°C
Max. recommended extensions per min.:	approx. 80 to 100 (at 20°C)
Max. piston speed:	1.6 m/s

2480.82.00250.

Initial spring force versus charge pressure

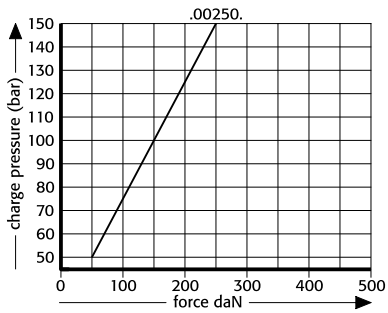

2480.82.00250.

Spring force Diagram displacement versus stroke rise

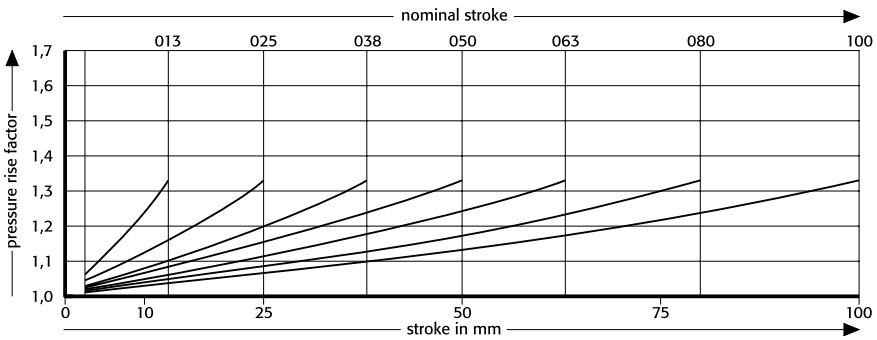

Pressure rise factor accounts for displacement but not external influences!

2480.00.51.05

Box spanner for assembling/disassembling of gas springs

Mounting example:

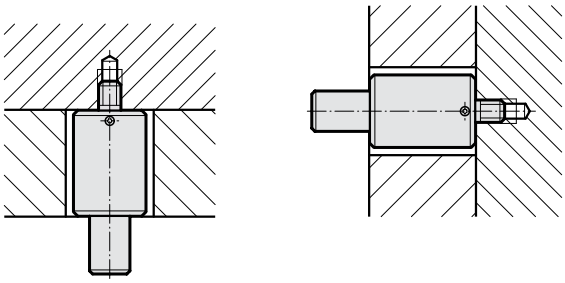

FIBRO

2487.82.01000.

POWER LINE Gas Springs with male fixing thread and increased spring force

APPROVED PED 97/23/EC

2487.82.01000.

Initial spring force at 150 bar = 920 daN

Order No	stroke max.	$l_{min.}$	l
2487.82.01000. 013	13	51	64
016	16	54	70
019	19	57	76
025	25	63	88
032	32	70	102
038	38	76	114
050	50	88	138
063	63	101	164
075	75	113	188
080	80	118	198
100	100	138	238
125	125	163	288

Order No for spare parts kit: 2487.12.01000

2487.82.01000.

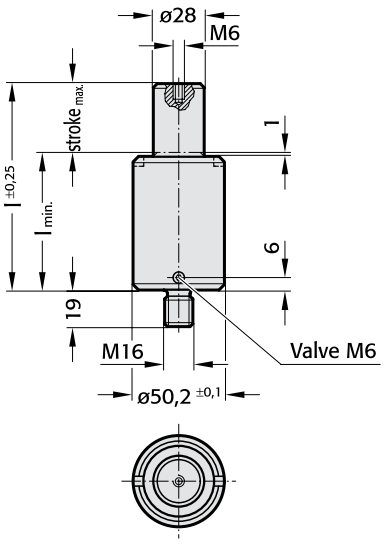

Pressure medium:	Nitrogen N2
Max. filling pressure:	150 bar
Min. filling pressure:	25 bar
Working temperature:	0°C to +80°C
Temperature related force increase:	±0.3%/°C
Max. recommended extensions per min.:	approx. 50 to 100 (at 20°C)
Max. piston speed:	1.6 m/s

2487.82.01000.

Initial spring force versus charge pressure

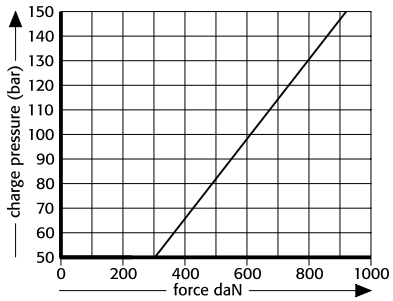

2487.82.01000.

Spring force Diagram displacement versus stroke rise

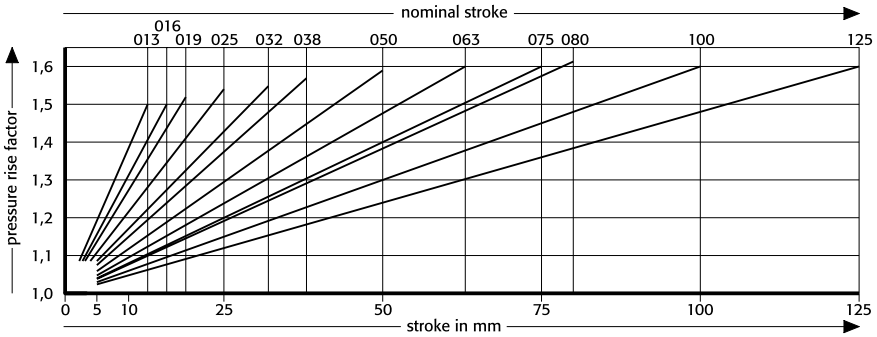

Pressure rise factor accounts for displacement but not external influences!

Gas Springs with hexagonal flange (Stabiliser)

2480.33.

2480.33.

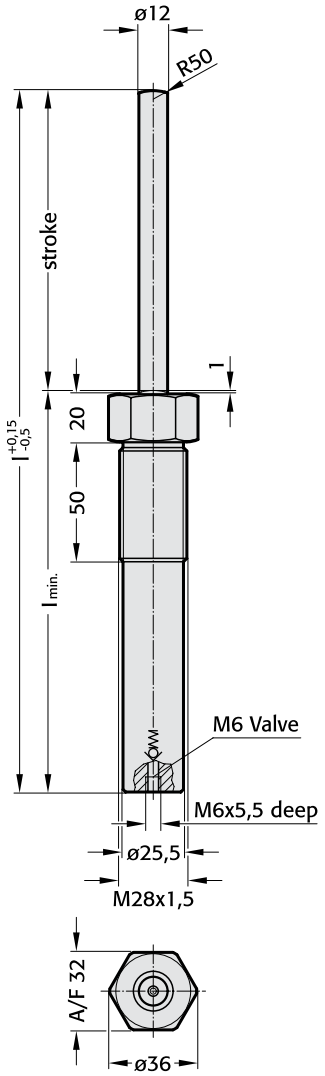

2480.33.00015.125
00050.125
00100.125
00150.125
00200.125

Order No		stroke	l_{min}	l
2480.33. [ ]	.125	125	167	292

Pressure medium:	Nitrogen N2
Max. filling pressure:	180 bar
Min. filling pressure:	13 bar
Working temperature:	0°C to +80°C
Temperature related force increase:	±0.3%/°C
Max. recommended extensions per min.:	approx. 80 to 100 (at 20°C)
Max. piston speed:	1.6 m/s

Springs Force Colour Markings

Order No	pressure bar	Initial spring force daN	Colour
2480.33. 00015.	13	15	Black
00050.	45	50	Green
00100.	90	100	Blue
00150.	135	150	Red
00200.	180	200	Yellow

Ordering code (example):

Gas spring	=	2480.33.
Force 50 daN	=	00050.
Stroke 125 mm	=	125
Order No	=	2480.33.00050.125

Description:

The gas springs are colour-coded according to the spring force rating ranges 15-50-100-150-200 daN
All springs, regardless of their spring force ratings, are of the same design The differing force ratings result exclusively from the differing charge pressures. Do take into consideration the colour-coded pressure rating during repair work and recharging.

Note:

Other stroke lengths available on request! See Gas Springs 2480.32.

Order No for spare parts kit:
2480.21.00150

2480.33.

Initial spring force versus charge pressure

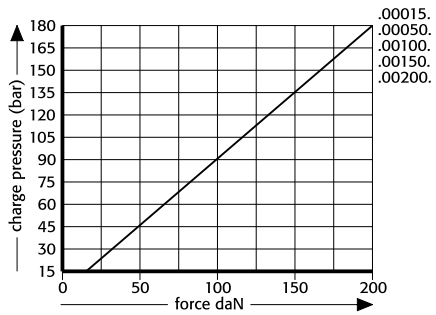

2480.33.

Spring force Diagram displacement versus stroke rise

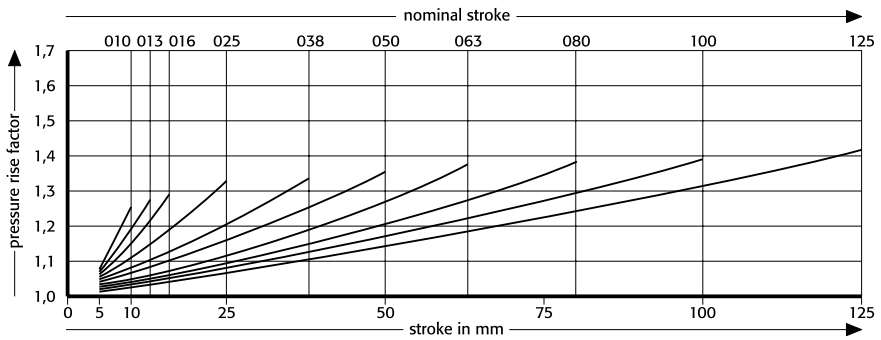

Pressure rise factor accounts for displacement but not external influences!

subject to alterations

Gas Springs for working temperatures up to 180 °C

Gas springs up to180 °C
Mounting Variations

2483.12.00250.

2480.022.00250

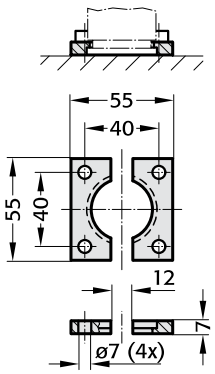

2480.055.00250

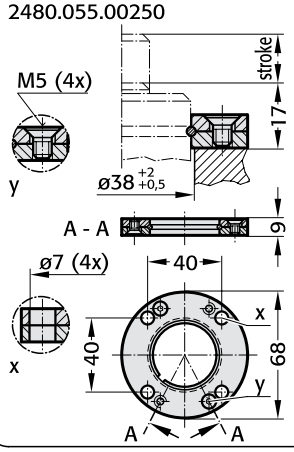

2480.057.00250

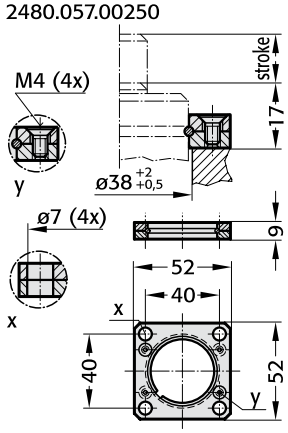

2480.007.00250

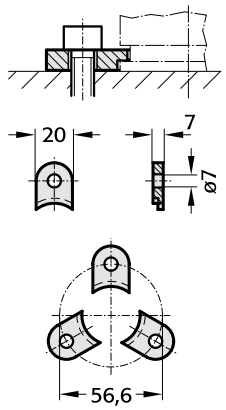

2480.008.00250 [3]

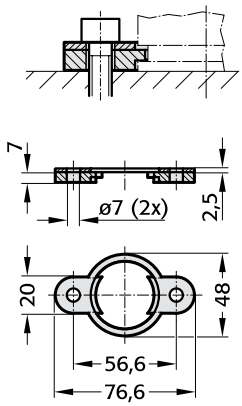

2480.044.00250 [2]

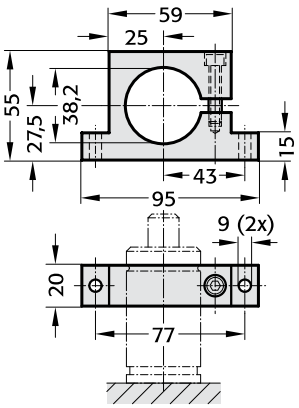

2480.010.00250.055 [3]
2480.010.00250.095* [3]

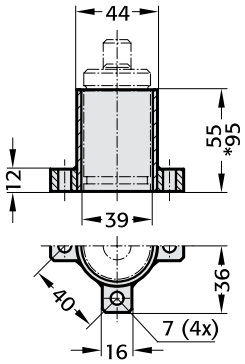

Notes:

[2] Attention:
The spring force must be absorbed by the stop surface.

[3] Not for use with composite connection.

subject to alterations

2483.12.00250. Gas Springs up to 180°C

APPROVED PED 97/23/EC

2483.12.00250.

Initial spring force at 120 bar / 20 °C
= 210 daN

Order No		stroke max.	l_{min}	l
2483.12.00250.	010	10	60	70
	013	12,7	62,7	75,4
	016	16	66	82
	025	25	75	100
	038	38,1	88,1	126,2
	050	50	100	150
	063	63,5	113,5	177
	080	80	130	210
	100	100	150	250
	125	125	175	300

2483.12.00250.

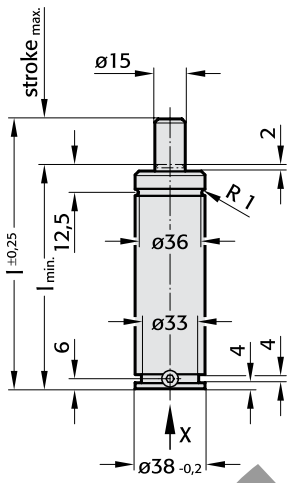

Note:

Order No for spare parts kit:
2483.12.00250

Pressure medium:	Nitrogen N_2
Max. filling pressure:	120 bar
Min. filling pressure:	50 bar
Working temperature:	+20 °C to +180 °C
Temperature related force increase:	±0.3%/°C
Max. recommended extensions per minute:	approx. 60 (at 20 °C)
Max. piston speed:	1.6 m/s

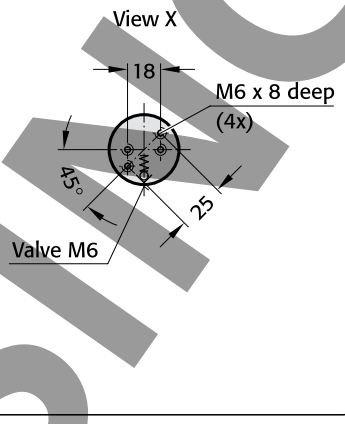

2483.12.00250.

Initial spring force in dependence on charge pressure and working temperature

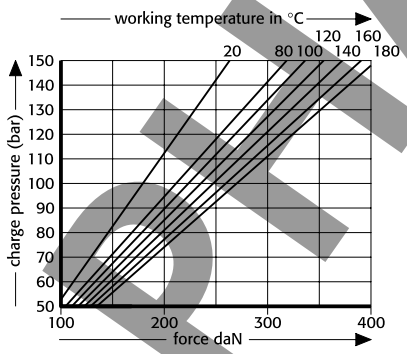

2483.12.00250.

Spring force Diagram displacement versus stroke rise

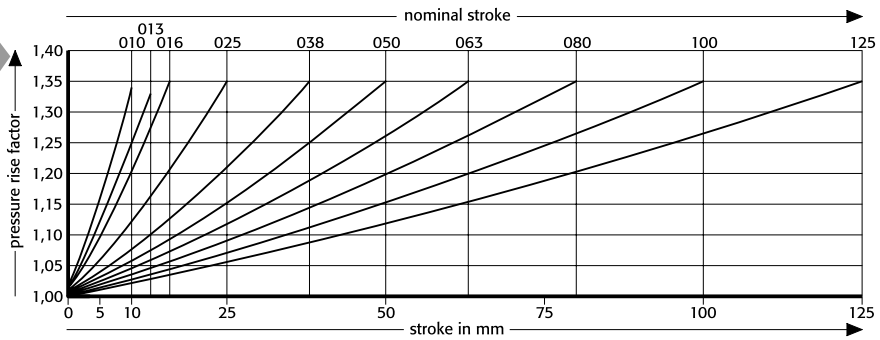

Pressure rise factor accounts for displacement but not external influences!

PHASING OUT

Gas springs up to 180 °C
Mounting Variations

2483.13.00750.

2480.011.00750.3

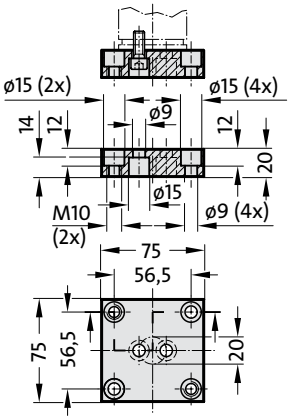

2480.011.00750

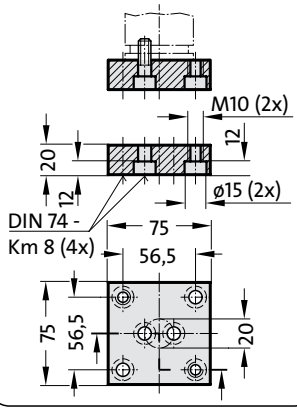

2480.011.00750.1

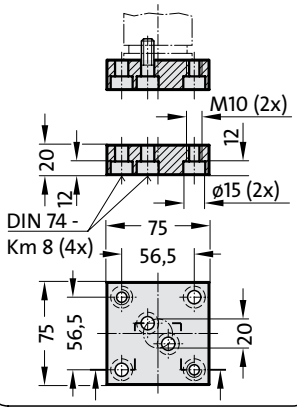

2480.022.00750

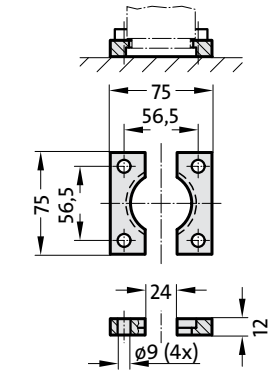

2480.055.00750

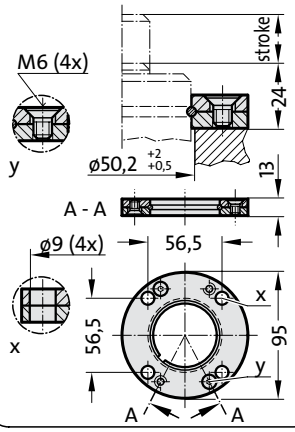

2480.057.00750

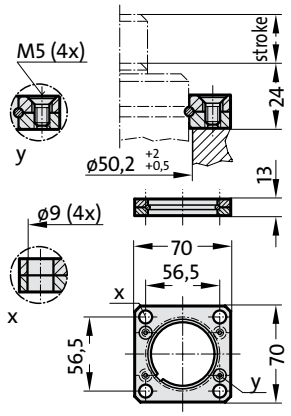

2480.007.00750

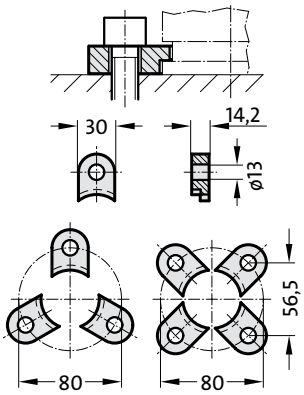

2480.008.00750 3)

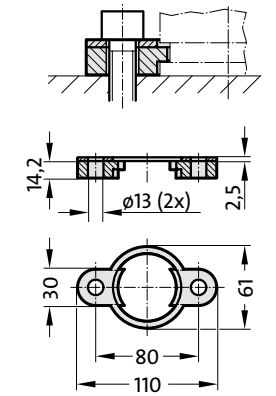

2480.064.00750 4)

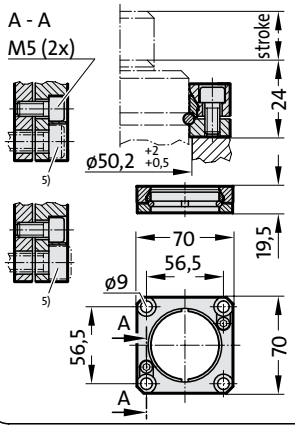

2480.044.00750 2)

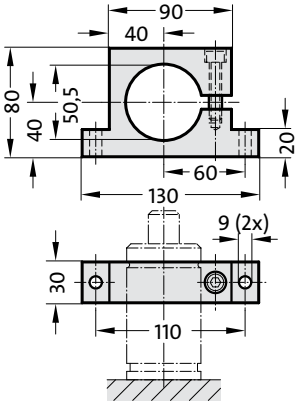

2480.010.00750.115 3)
2480.010.00750.190* 3)

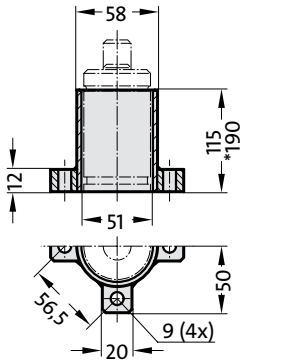

2480.045.00750 2)

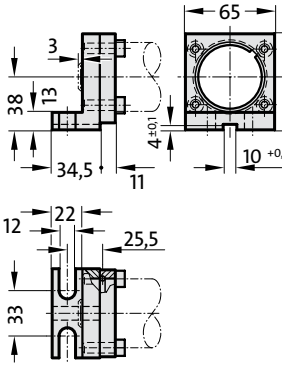

2480.047.00750 2)

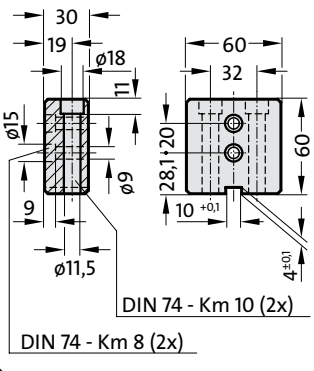

Notes:

2) Attention:
The spring force must be absorbed by the stop surface.

3) Not for use with composite connection.

4) Square collar flange, non-rotating, fixing for composite connection.

5) Machine screws with hexagonal socket (compact head recommended).

subject to alterations

FIBRO

2483.13.00750. Gas Springs up to 180°C

APPROVED PED 97/23/EC

2483.13.00750.

Initial spring force at 120 bar/20ºC = 600 daN

Order No	stroke max.	lmin	l
2483.13.00750.013	12,7	107,7	120,4
025	25	120	145
038	38,1	133,1	171,2
050	50	145	195
063	63,5	158,5	222
080	80	175	255
100	100	195	295
125	125	220	345
160	160	255	415

2483.13.00750.

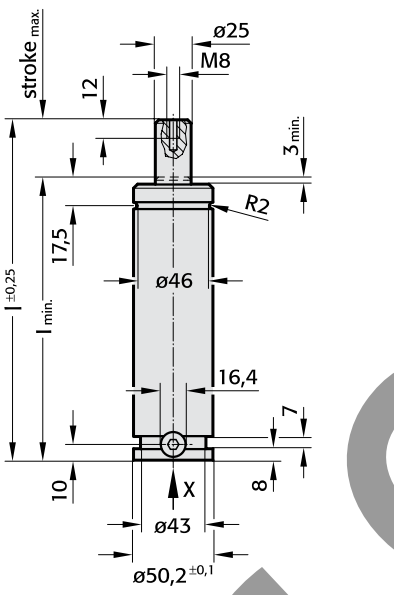

Note:

Order No for spare parts kit:
2483.13.00750

Pressure medium:	Nitrogen N_2
Max. filling pressure:	120 bar
Min. filling pressure:	50 bar
Working temperature:	+20 °C to +180 °C
Temperature related force increase:	±0.3%/°C
Max. recommended extensions per minute:	approx. 15 to 40 (at 20 °C)
Max. piston speed:	1.6 m/s

2483.13.00750.

Initial spring force in dependence on charge pressure and working temperature

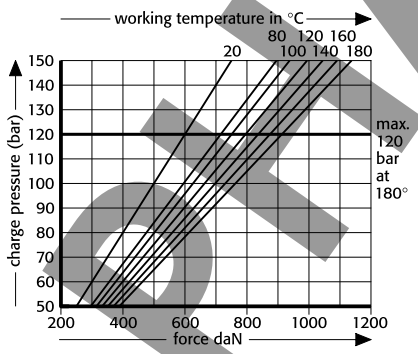

2483.13.00750.

Spring force Diagram displacement versus stroke rise

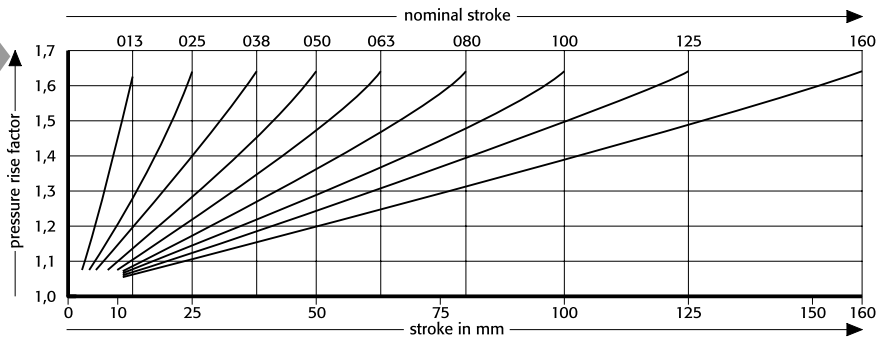

Pressure rise factor accounts for displacement but not external influences!

PHASING OUT

subject to alterations

LCF gas springs, damped

Description

The LCF series represents a whole new generation of nitrogen-filled gas springs developed to meet the needs of the machine tool and press-making industries.

Negative factors such as

- high impact stresses
- excessive noise
- extreme bounce off the pad

are all minimised by LCF springs.

Characteristics such as

- dimensions
- fixing methods
- filling with gas and purging
- working in interconnected systems

are identical to those for standard ISO or type 2480.13 gas springs.

The springs from the LCF series reduce impact stresses by 50% compared to conventional gas springs.

The force builds up gradually and acceleration is uniform, reducing wear on both tool and press. As a result, less maintenance is required.

LCF springs are at least 20% quieter than standard gas springs.

The reduced noise level is due to the lower impact force, making these springs a cost-effective alternative to soundproofing panels. They are thus more economical and environmentally-friendly.

The LCF springs reduce the extreme bounce off the pad during the return stroke, thus lessening vibration on the workpiece and allowing the workpiece to be transported more effectively.

Since the spring travel is damped, the pad motion is more uniform, so in many cases the press stroke rate and thus productivity can be increased.

* LCF Force Manager is a trade mark of Associated Spring

Force diagram for gas springs

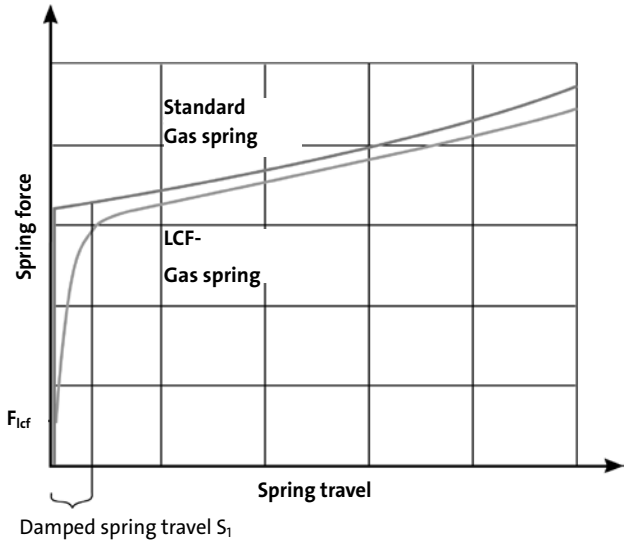

With the springs from the LCF series, the force builds up gradually and acceleration is uniform.

Measured dynamic piston force

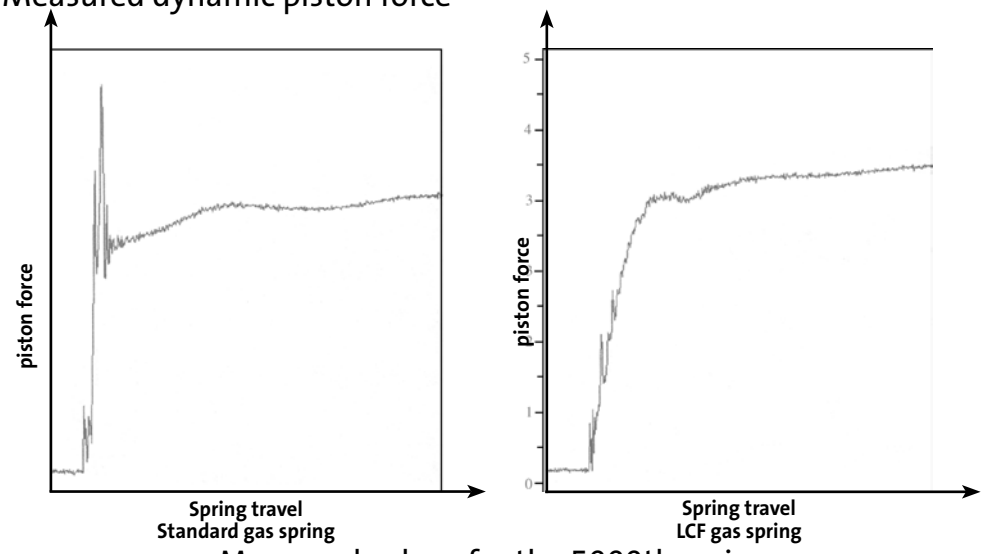

Measured values for the 5000th series

Comparative press load diagram

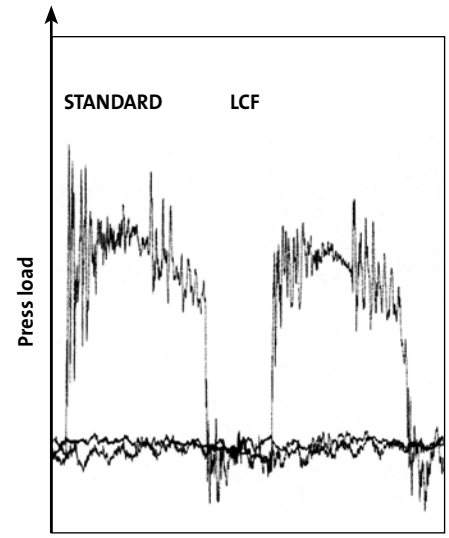

Noise reduction

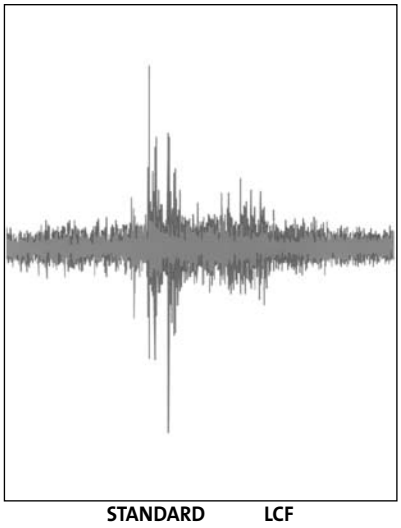

The springs from the LCF series are quieter due to the reduced impact force.

Force diagram for gas springs

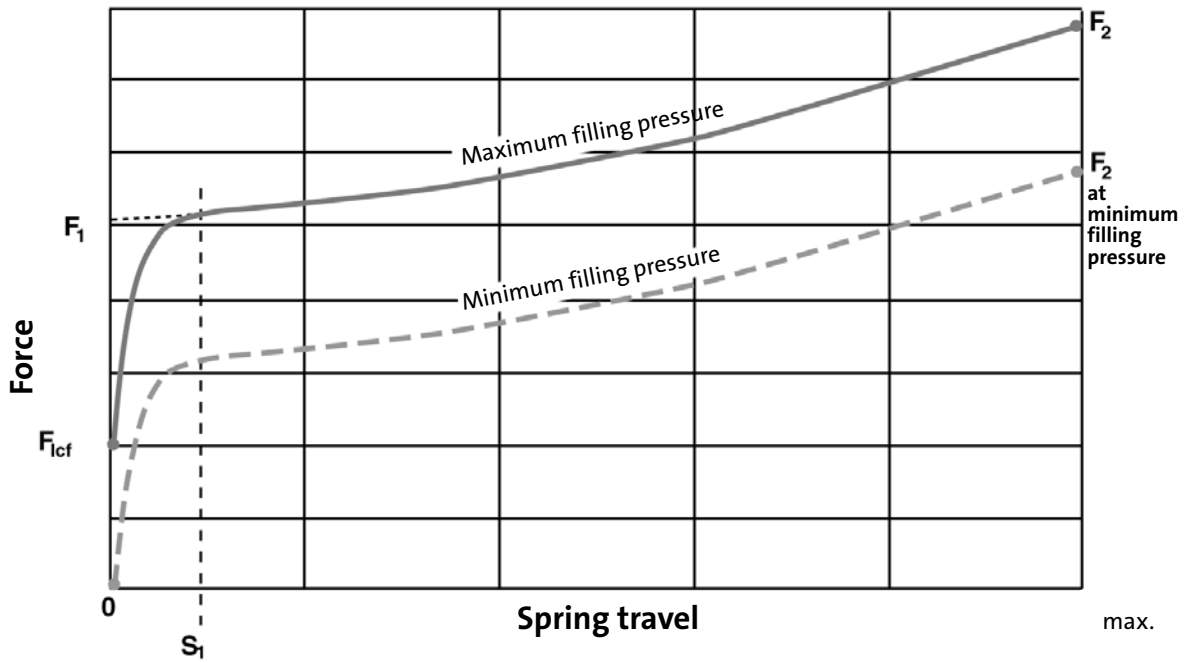

Note: Maximum pressure for LCF gas springs: 150 bar. Observe minimum filling pressure.

Guidelines for the use of LCF gas springs

1. After the damped spring travel (S_1) the LCF gas spring achieves the same initial spring force (F_1) and pressure build up as the standard gas spring (to ISO).
2. The spring force (F_{lcf}) should exceed the weight (e.g. the pad) by at least 15% so that it is held in the correct position (this does not apply in the case of minimum filling pressure).

Spring size	F_{lcf} at 150 bar in daN	Damped spring travel S_1	Minimum filling pressure in bar
2484.13.00750.	470	3,1	70
2484.12.01500.	700	4,6	105
2484.13.03000.	1600	3,8	69
2484.13.05000.	2500	7,7	76
2484.13.07500.	3000	10,4	90

Gas Springs
Mounting Variations

2484.13.00750.

2480.011.00750.3

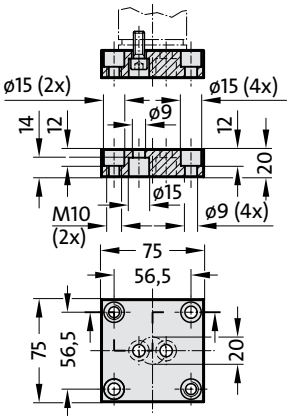

2480.011.00750

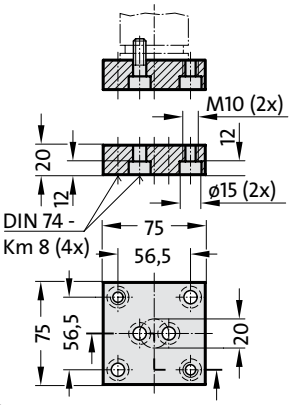

2480.011.00750.1

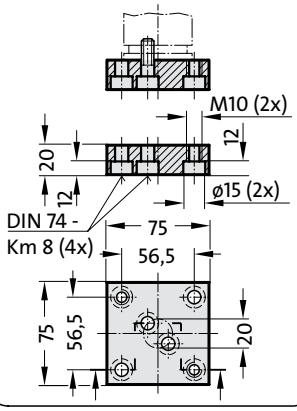

2480.022.00750

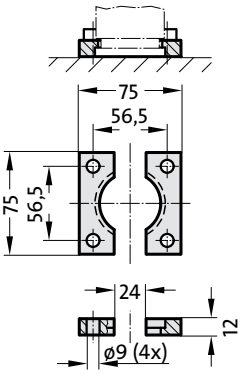

2480.055.00750

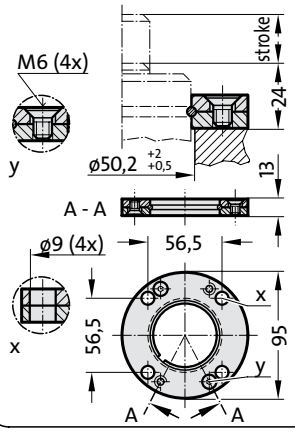

2480.057.00750

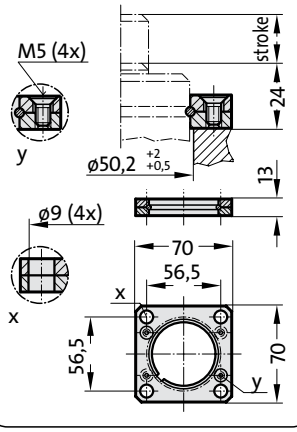

2480.007.00750

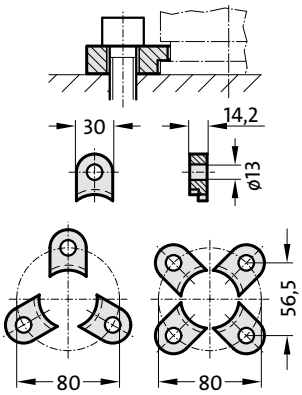

2480.008.00750 3)

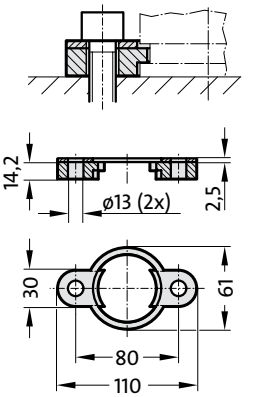

2480.064.00750 4)

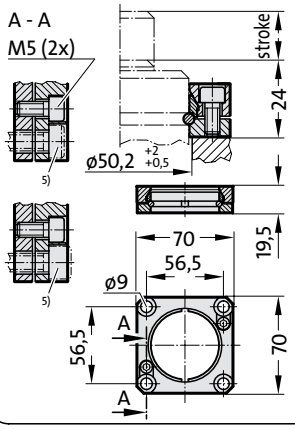

2480.044.00750 2)

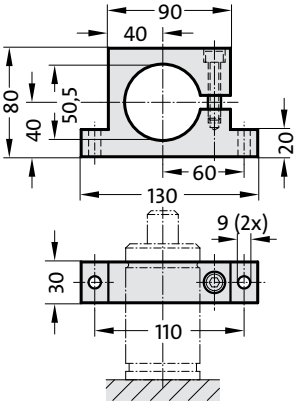

2480.010.00750.115 3)
2480.010.00750.190* 3)

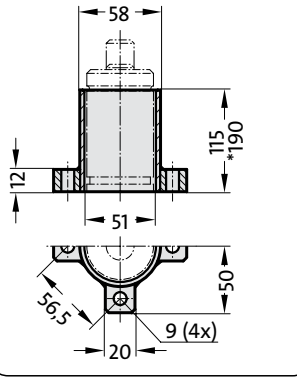

2480.045.00750 2)

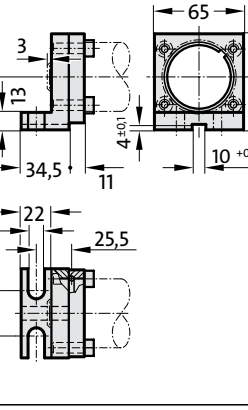

2480.047.00750 2)

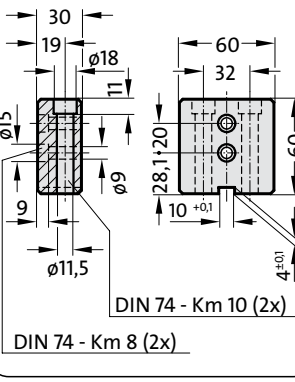

Notes:

2) Attention:
The spring force must be absorbed by the stop surface.

3) Not for use with composite connection.

4) Square collar flange, non-rotating, fixing for composite connection.

5) Machine screws with hexagonal socket (compact head recommended).

subject to alterations

FIBRO

2484.13.00750.

LCF gas springs, damped

APPROVED PED 97/23/EC

2484.13.00750.

Initial spring force F_{lcf} at 150 bar = 470 daN
Full spring force after 3.1 mm damped spring travel

Order No	stroke max.	l_{min}	l
2484.13.00750. 013	12,7	107,7	120,4
025	25	120	145
038	38,1	133,1	171,2
050	50	145	195
063	63,5	158,5	222
080	80	175	255
100	100	195	295
125	125	220	345
160	160	255	415
200	200	295	495
250	250	345	595
300	300	395	695

2484.13.00750.

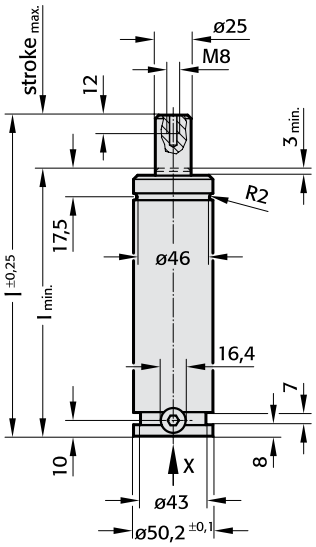

View X - Gas spring

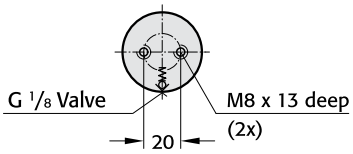

View X - Gas spring with 2 connections

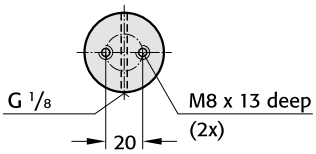

Note:

Order No for spare parts kit:
2484.13.00750

Gas spring with two connections
Ordering-code (example)
2484.13.00750. □□□.2

Gas spring
2484.13.00750. □□□.2
is supplied only with 2 G1/8" threads, with 2 blanking plugs and without valve, unpressurised. This gas spring can only be used installed.

Pressure medium:	Nitrogen N_2
Max. filling pressure:	150 bar
Min. filling pressure:	70 bar
Working temperature:	0 °C to +80 °C
Temperature related force increase:	±0.3%/°C
Max. recommended extensions per minute:	approx. 15 to 40 (at 20 °C)
Max. piston speed:	1.6 m/s

2484.13.00750.

Initial spring force versus charge pressure

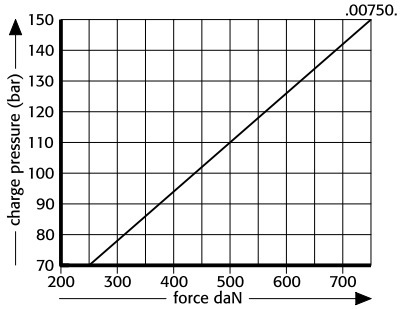

2484.13.00750.

Spring force Diagram displacement versus stroke rise

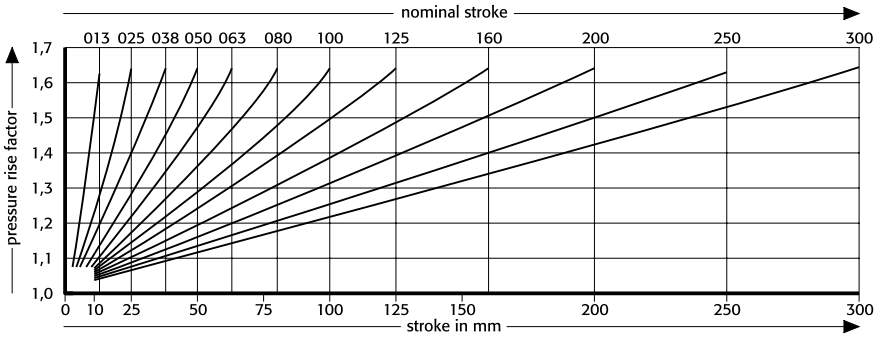

Pressure rise factor accounts for displacement but not external influences!

Gas Springs
Mounting Variations

2484.12.01500.

2480.011.01500

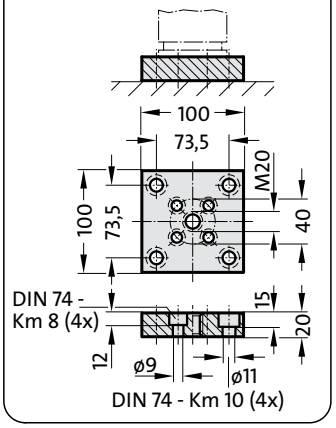

2480.011.01500.2

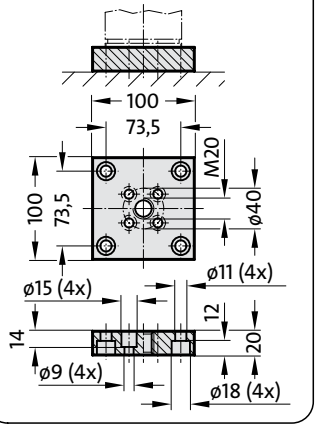

2480.022.01500

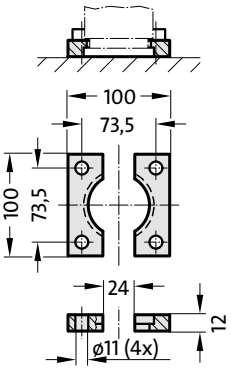

2480.055.01500

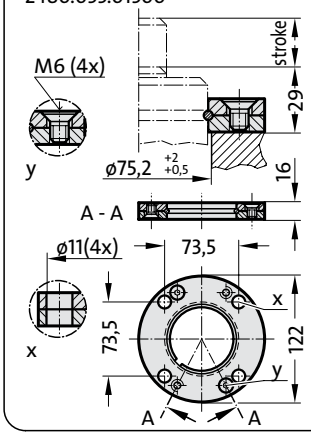

2480.057.01500

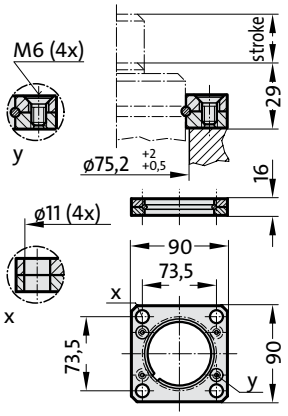

2480.007.01500

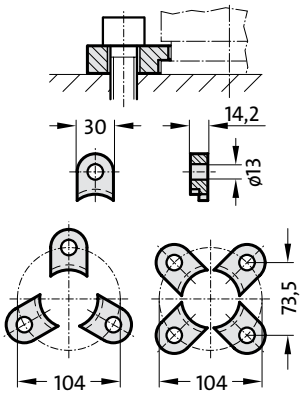

2480.008.01500 [3]

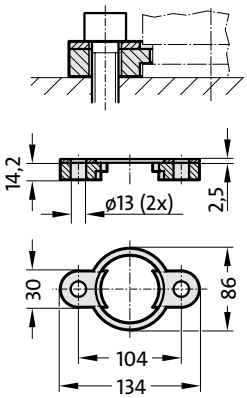

2480.064.01500 [4]

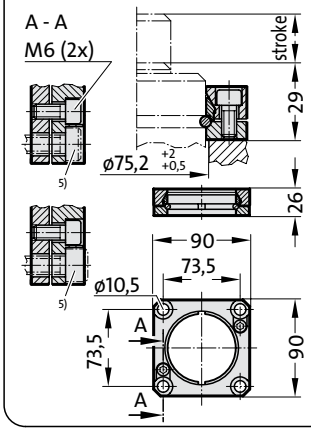

2480.044.01500 [2]

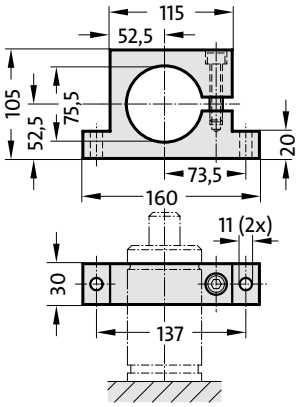

2480.010.01500.130 [3]
2480.010.01500.205* [3]

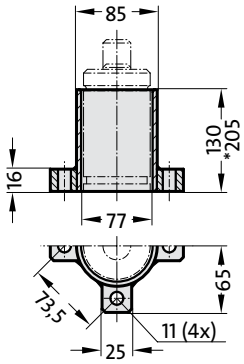

2480.045.01500 [2]

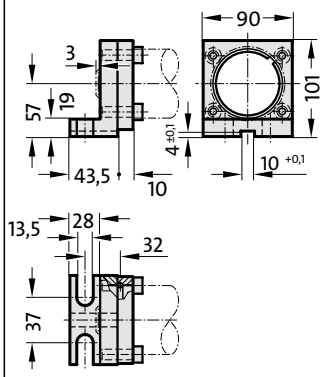

2480.047.01500 [2]

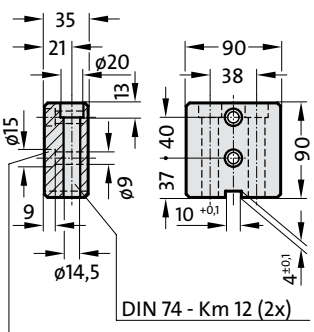

Notes:

[2] Attention:
The spring force must be absorbed by the stop surface.

[3] Not for use with composite connection.

[4] Square collar flange, non-rotating, fixing for composite connection.

[5] Machine screws with hexagonal socket (compact head recommended).

subject to alterations

FIBRO

2484.12.01500.

LCF gas springs, damped

APPROVED PED 97/23/EC

2484.12.01500.

Initial spring force F_{lcf} at 150 bar = 700 daN
Full spring force after 4.6 mm damped spring travel

Order No	stroke max.	l_{min}	l
2484.12.01500.025	25	135	160
038	38,1	148,1	186,2
050	50	160	210
063	63,5	173,5	237
080	80	190	270
100	100	210	310
125	125	235	360
160	160	270	430
200	200	310	510
250	250	360	610
300	300	410	710

2484.12.01500.

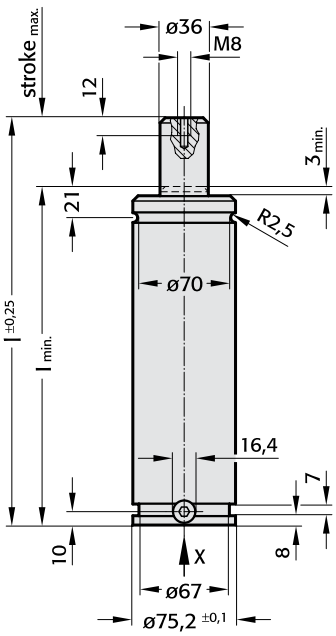

View X - Gas spring

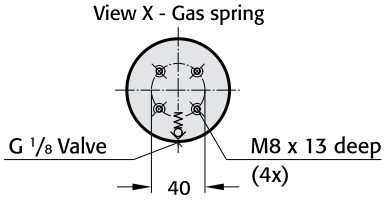

View X - Gas spring with 2 connections

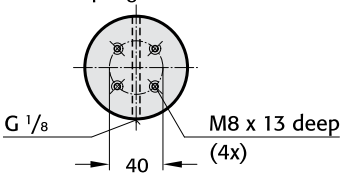

Note:

Order No for spare parts kit:
2484.12.01500

Gas spring with two connections
Ordering-code (example)
2484.12.01500. ☐☐☐.2

Gas spring
2484.12.01500. ☐☐☐.2
is supplied only with 2 G1/8" threads, with 2 blanking plugs and without valve, unpressurised. This gas spring can only be used installed.

Pressure medium:	Nitrogen N_2
Max. filling pressure:	150 bar
Min. filling pressure:	105 bar
Working temperature:	0 °C to +80 °C
Temperature related force increase:	±0.3%/°C
Max. recommended extensions per minute:	approx. 15 to 40 (at 20 °C)
Max. piston speed:	1.6 m/s

2484.12.01500.

Initial spring force versus charge pressure

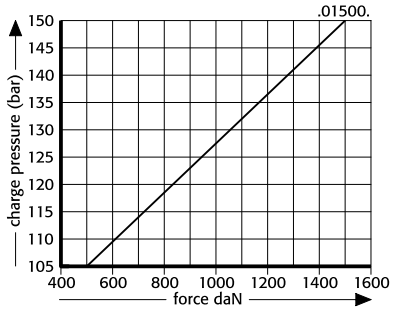

2484.12.01500.

Spring force Diagram displacement versus stroke rise

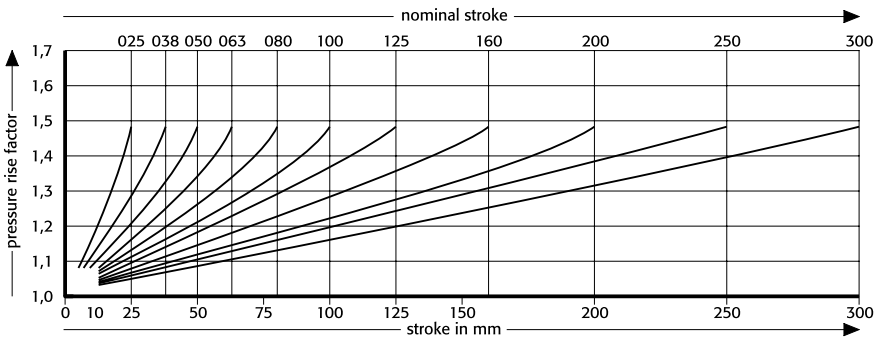

Pressure rise factor accounts for displacement but not external influences!

Gas Springs
Mounting Variations

2484.13.03000.

2480.011.03000

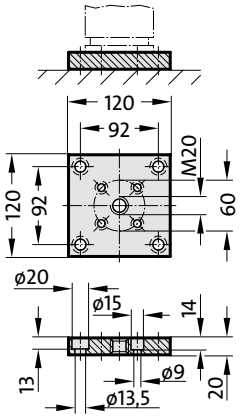

2480.011.03000.2

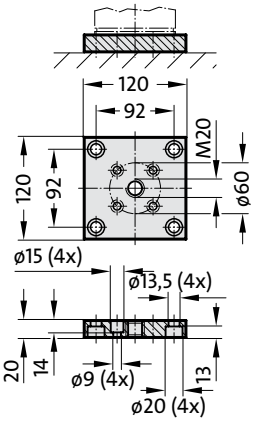

2480.022.03000

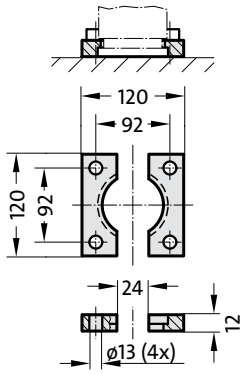

2480.055.03000

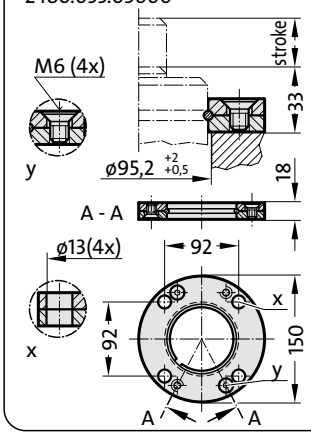

2480.057.03000

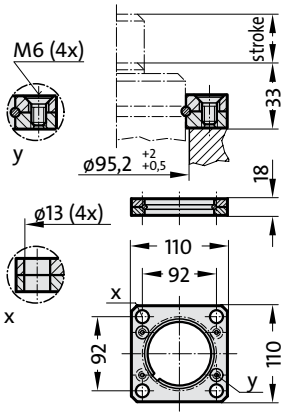

2480.007.03000

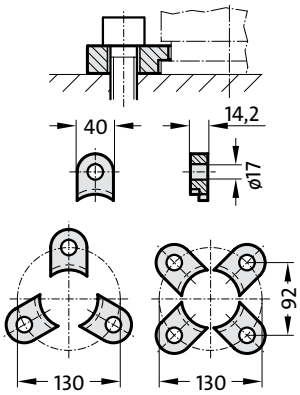

2480.008.03000 3)

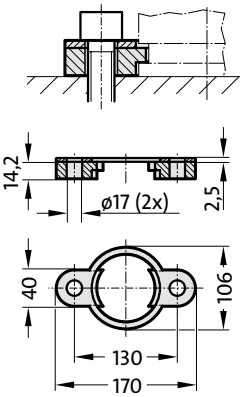

2480.064.03000 4)

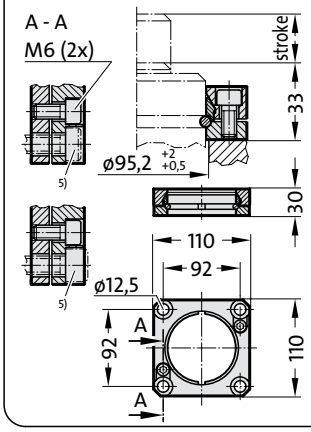

2480.044.03000 2)

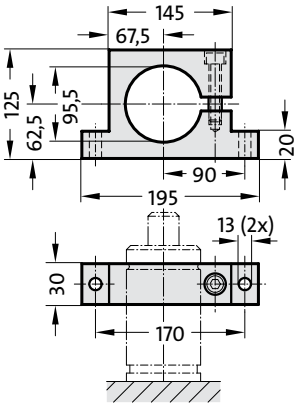

2480.010.03000.140 3)
2480.010.03000.215* 3)

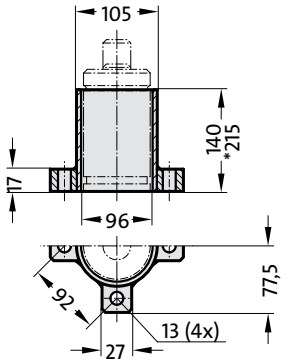

2480.045.03000 2)

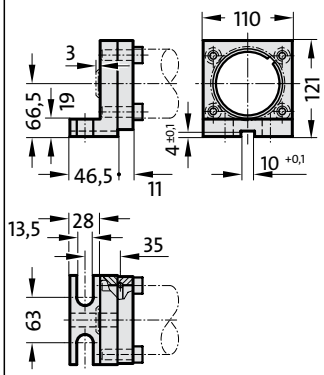

2480.047.03000 2)

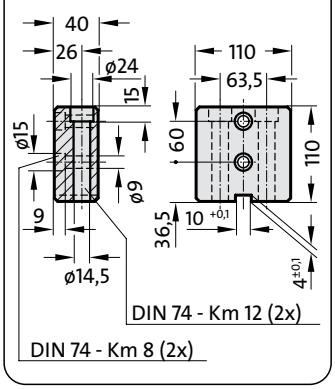

Notes:

2) Attention:
The spring force must be absorbed by the stop surface.

3) Not for use with composite connection.

4) Square collar flange, non-rotating, fixing for composite connection.

5) Machine screws with hexagonal socket (compact head recommended).

subject to alterations

FIBRO

2484.13.03000.

LCF gas springs, damped

APPROVED PED 97/23/EC

2484.13.03000.

Initial spring force F_{lcf} at 150 bar = 1600 daN
Full spring force after 3.8 mm damped spring travel

Order No	stroke max.	l_{min}	l
2484.13.03000.025	25	145	170
038	38,1	158,1	196,2
050	50	170	220
063	63,5	183,5	247
080	80	200	280
100	100	220	320
125	125	245	370
160	160	280	440
200	200	320	520
250	250	370	620
300	300	420	720

2484.13.03000.

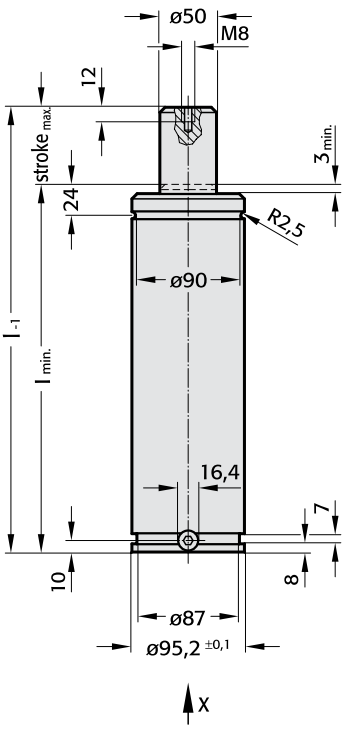

View X - Gas spring

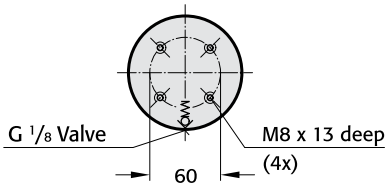

View X - Gas spring with 2 connections

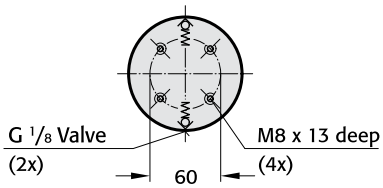

Note:

Order No for spare parts kit:
2484.13.03000

Gas spring with 2 connections
Ordering example:
2484.13.03000. □□□.2

Pressure medium:	Nitrogen N_2
Max. filling pressure:	150 bar
Min. filling pressure:	68 bar
Working temperature:	0 °C to +80 °C
Temperature related force increase:	±0.3%/°C
Max. recommended extensions per minute:	approx. 15 to 40 (at 20 °C)
Max. piston speed:	1.6 m/s

2484.13.03000.

Initial spring force versus charge pressure

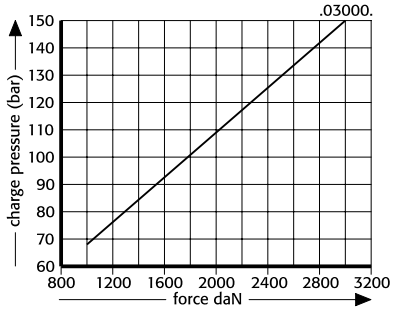

2484.13.03000.

Spring force Diagram displacement versus stroke rise

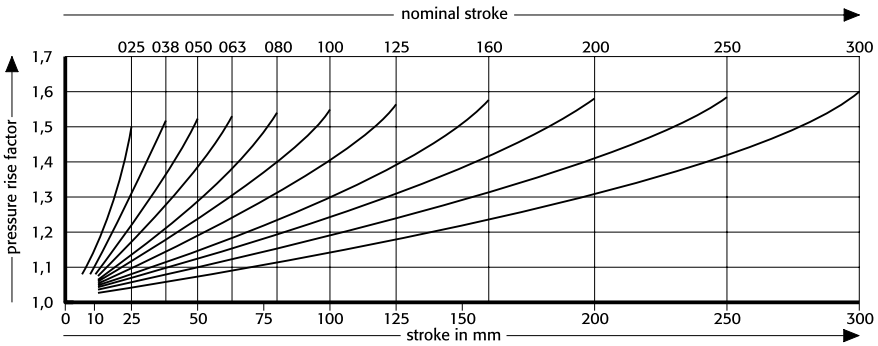

Pressure rise factor accounts for displacement but not external influences!

Gas Springs
Mounting Variations

2484.13.05000.

2480.011.05000

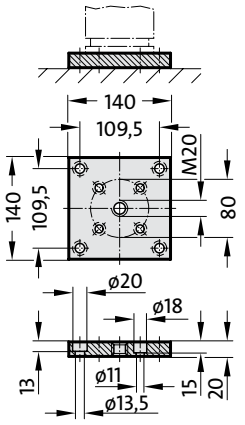

2480.011.05000.2

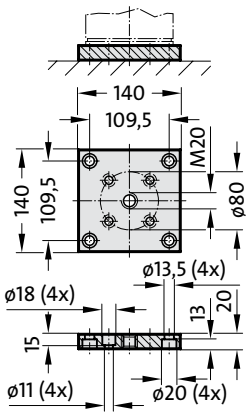

2480.022.05000

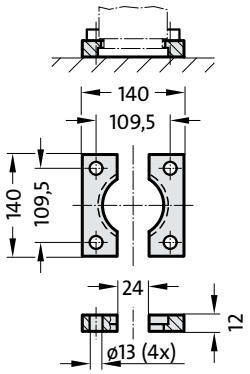

2480.055.05000

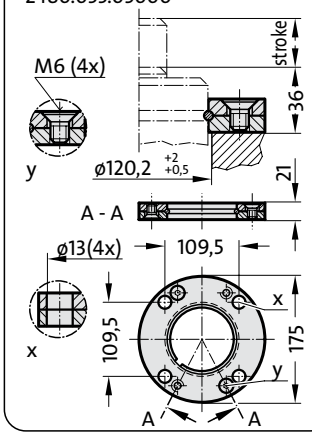

2480.057.05000

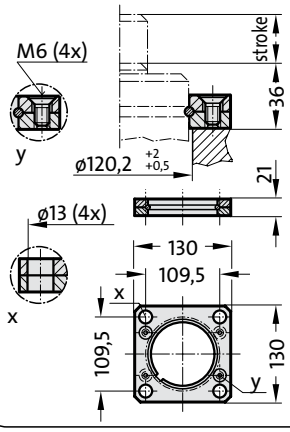

2480.007.05000

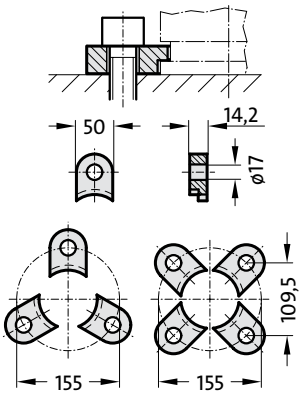

2480.008.05000 3)

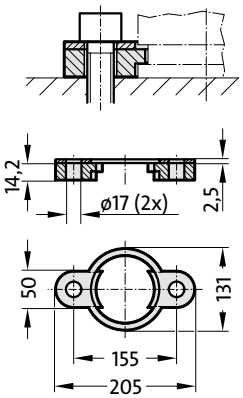

2480.064.05000 4)

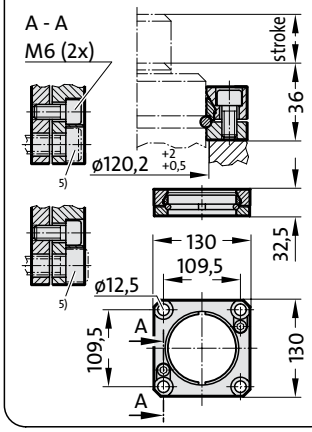

2480.044.05000 2)

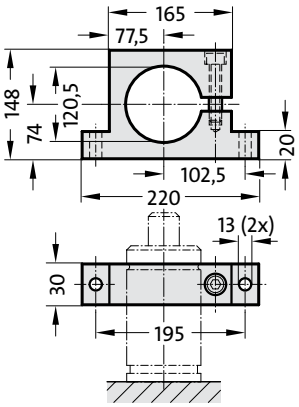

2480.010.05000.160 3)

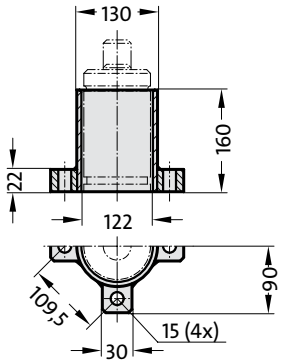

2480.045.05000 2)

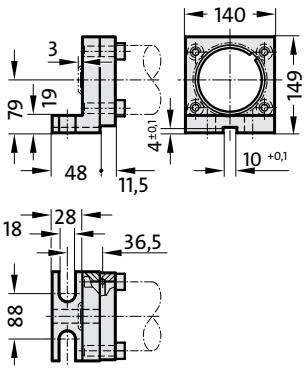

2480.047.05000 2)

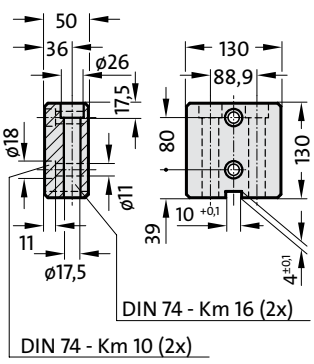

Notes:

2) Attention:
The spring force must be absorbed by the stop surface.

3) Not for use with composite connection.

4) Square collar flange, non-rotating, fixing for composite connection.

5) Machine screws with hexagonal socket (compact head recommended).

subject to alterations

FIBRO

2484.13.05000.

LCF gas springs, damped

APPROVED PED 97/23/EC

2484.13.05000.

Initial spring force F_{lcf} at 150 bar = 2500 daN
Full spring force after 7.7 mm damped spring travel

Order No	stroke max.	l_{min}	l
2484.13.05000.025	25	165	190
038	38,1	178,1	216,2
050	50	190	240
063	63,5	203,5	267
080	80	220	300
100	100	240	340
125	125	265	390
160	160	300	460
200	200	340	540
250	250	390	640
300	300	440	740

2484.13.05000.

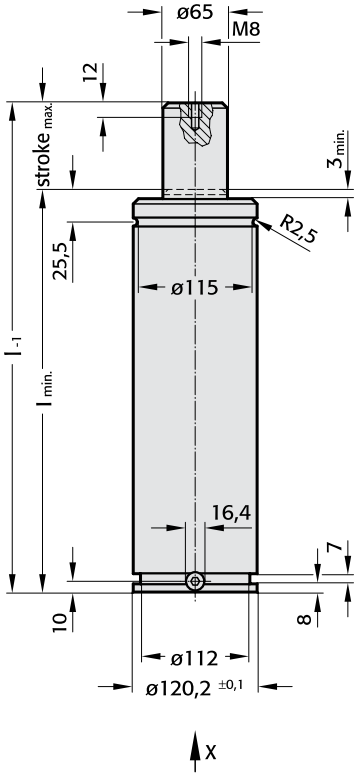

View X - Gas spring

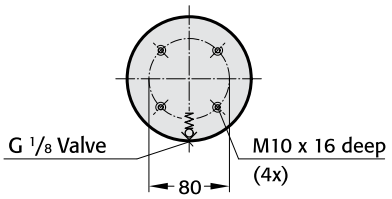

View X - Gas spring with 2 connections

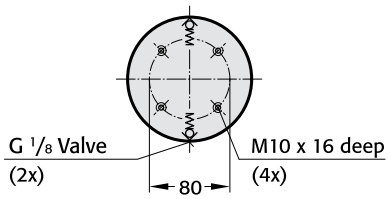

Note:

Order No for spare parts kit:
2484.13.05000

Gas spring with 2 connections
Ordering example:
2484.13.05000. ☐☐☐.2

Pressure medium:	Nitrogen N_2
Max. filling pressure:	150 bar
Min. filling pressure:	75 bar
Working temperature:	0 °C to +80 °C
Temperature related force increase:	±0.3%/°C
Max. recommended extensions per minute:	approx. 15 to 40 (at 20 °C)
Max. piston speed:	1.6 m/s

2484.13.05000.

Initial spring force versus charge pressure

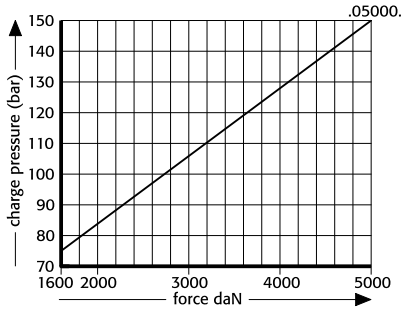

2484.13.05000.

Spring force Diagram displacement versus stroke rise

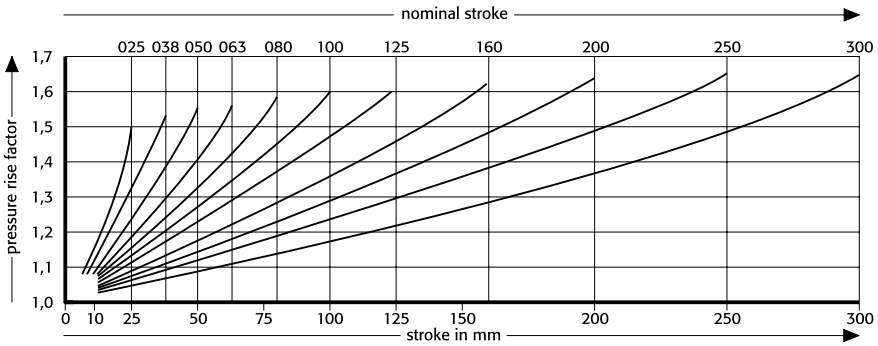

Pressure rise factor accounts for displacement but not external influences!

Gas Springs
Mounting Variations

2484.13.07500.

2480.011.07500

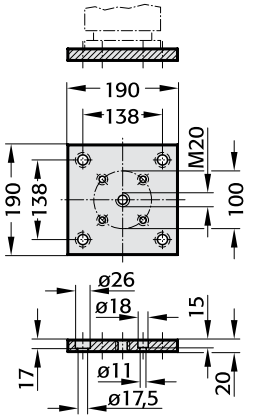

2480.022.07500

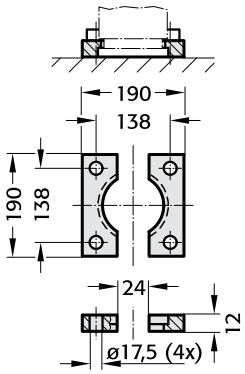

2480.055.07500

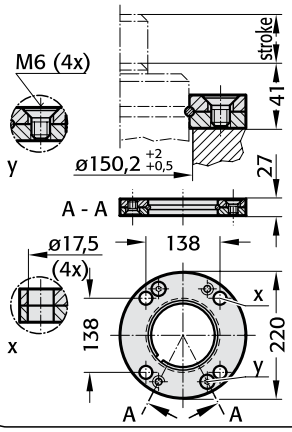

2480.057.07500

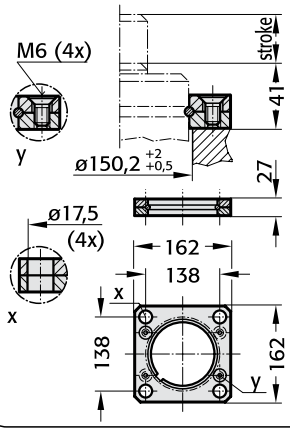

2480.007.07500

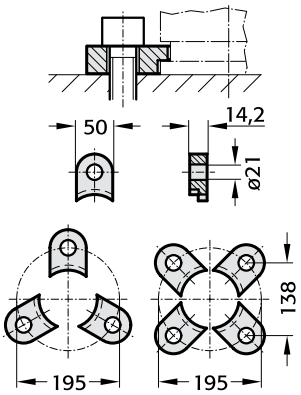

2480.008.07500 [3]

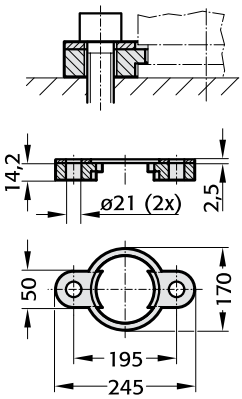

2480.064.07500 [4]

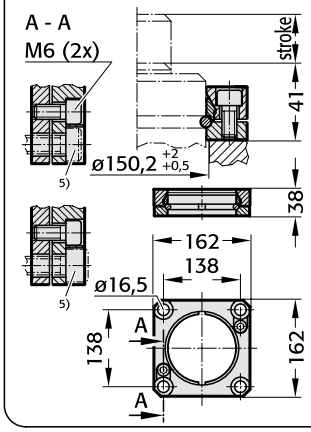

2480.044.07500 [2]

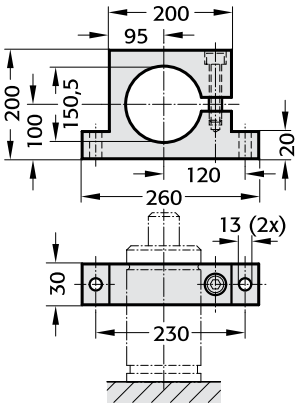

Notes:

[2] Attention:
The spring force must be absorbed by the stop surface.

[3] Not for use with composite connection.

[4] Square collar flange, non-rotating, fixing for composite connection.

[5] Machine screws with hexagonal socket (compact head recommended).

subject to alterations

FIBRO

2484.13.07500.

LCF gas springs, damped

APPROVED PED 97/23/EC

2484.13.07500.

Initial spring force F_{lcf} at 150 bar = 3000 daN
Full spring force after 10.4 mm damped spring travel

Order No	stroke max.	l_{min}	l
2484.13.07500.025	25	180	205
038	38,1	193,1	231,2
050	50	205	255
063	63,5	218,5	282
080	80	235	315
100	100	255	355
125	125	280	405
160	160	315	475
200	200	355	555
250	250	405	655
300	300	455	755

2484.13.07500.

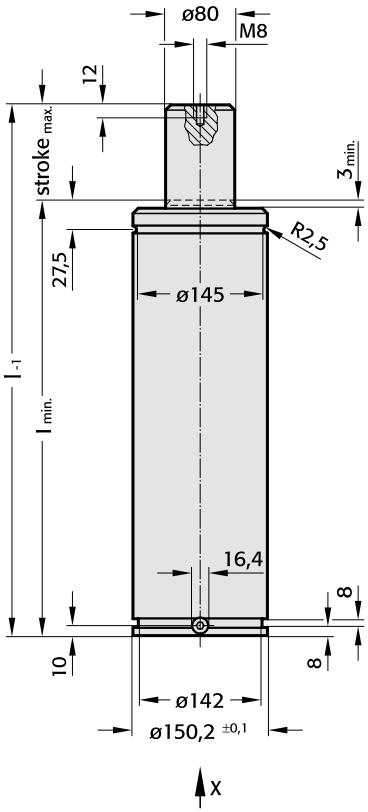

View X - Gas spring

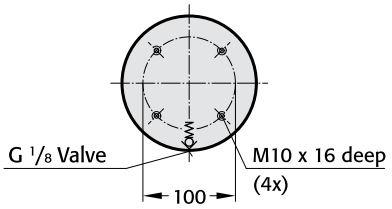

View X - Gas spring with 2 connections

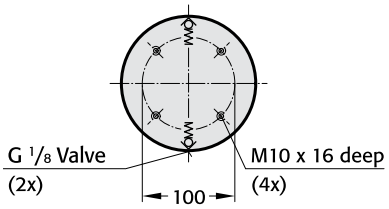

Note:

Order No for spare parts kit:
2484.13.07500

Gas spring with 2 connections
Ordering example:
2484.13.07500. ☐☐☐.2

Pressure medium:	Nitrogen N_2
Max. filling pressure:	150 bar
Min. filling pressure:	89 bar
Working temperature:	0 °C to +80 °C
Temperature related force increase:	±0.3%/°C
Max. recommended extensions per minute:	approx. 15 to 40 (at 20 °C)
Max. piston speed:	1.6 m/s

2484.13.07500.

Initial spring force versus charge pressure

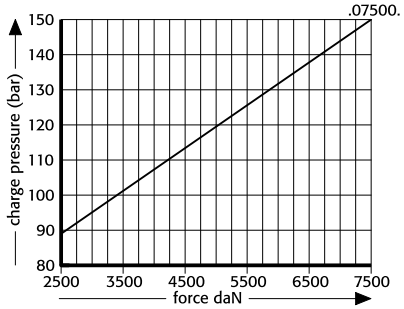

2484.13.07500.

Spring force Diagram displacement versus stroke rise

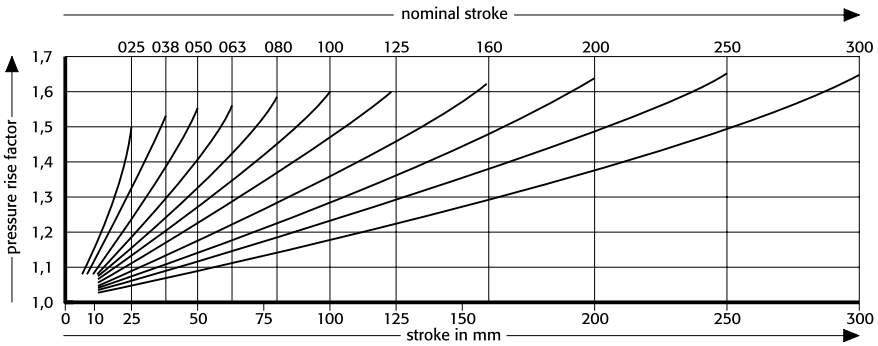

Pressure rise factor accounts for displacement but not external influences!

Controllable Gas Springs

Patented

Please request your catalogue

subject to alterations

Air Springs to VW Standard

Please request your catalogue

Manifold-systems

Please request your catalogue

subject to alterations